COUNTY OF ERIE

MARK C. POLONCARZ
COUNTY EXECUTIVE

DIVISION OF PURCHASE

INVITATION TO BID

Bids, as stated below, will be received and publicly opened by the Division of Purchase in accordance with the attached specifications. **FAX bids are unacceptable.** Bids must be submitted in a sealed envelope to:

County of Erie
Division of Purchase
Attention: Tricia Pierce, Buyer (716) 858-6337
95 Franklin Street, Room 1254
Buffalo, New York 14202-3967

NOTE: Lower left hand corner of envelope MUST indicate the following:

BID NUMBER: 215085-004

OPENING DATE Thursday, March 19, 2015 TIME: 10:00 am

FOR: Highway Summer Maintenance Bid

NAME OF BIDDER: _____

If you are submitting other Invitations to Bid, each bid must be enclosed in a separate envelope.

Following EXHIBITS are attached to and made a part of the bid specifications, and part of any agreement entered into pursuant to this Invitation to Bid:

X EXHIBIT "A" - Assignment of Public Contracts
X EXHIBIT "B" - Purchases by Other Local Governments or Special Districts
____ EXHIBIT "C" - Construction/Reconstruction Contracts
____ EXHIBIT "D" - Bid Bond (Formal Bid)
N/A EXHIBIT "E" - Bid Bond (Informal Bid)
X EXHIBIT "EP" - Erie County Equal Pay Certification
____ EXHIBIT "F" - Standard Agreement
X EXHIBIT "G" - Non-Collusive Bidding Certification
X EXHIBIT "H" - MBE/ WBE Commitment
X EXHIBIT "IC" - Insurance
____ EXHIBIT "J" - Apprentice Training Program Certification
____ EXHIBIT "P" & EXHIBIT "PBI" - Performance Bond
____ EXHIBIT "PW" - NYS Prevailing Wage
____ EXHIBIT "Q" - Confined Space Program Certification

County of Erie

DIVISION OF PURCHASE
BID SPECIFICATIONS

BID NO 215085-004

Ship to: County of Erie
Attention: DPW Highways &
Address: Various Departments

Ship Via: Most Economical
Date Required at Destination: As Needed

ITEM NO.	QUANTITY	UM	CATALOG NO./DESCRIPTION	UNIT PRICE	TOTAL PRICE
			Please furnish pricing for Highway Maintenance Materials as per		
			The following specifications for the contract period April 1, 2015 through March 31, 2016		
			Questions: Deputy Commissioner at 716.858.7372		
			Note: See Exhibit "H"		
			(1) List of WBE/MBE as requested **OR**		
			(2) Complete the Waiver Form		
			One or the other **must** be completed and returned with the bid.		
			Package in order for your bid to be considered.		
			*New York State Prevailing wage rates apply. www.labor.state.ny.us		
			IMPORTANT PLEASE NOTE		
			ALL BIDDERS MUST SUBMIT (10) EXTRA COPIES OF ONLY PRICING PAGES, CLEARLY MARKED		
			"EXTRA COPIES" AND PIT LOCATION INDICATED WITH COMPANY'S NAME. COPIES SHOULD BE		
			COLLATED AND STAPLED.		
			PROVIDE AN ELECTRONIC EXCEL FILE WITH SEALED BID!		

NOTE: Bid results cannot be given over the phone. All requests for bid results should be submitted in writing or faxed to:

ERIE COUNTY DIVISION OF PURCHASE
Freedom of Information Officer
95 Franklin Street, Rm. 1254
Buffalo, NY 14202
FAX #:**716-858-6465**

TOTAL NET BID DELIVERED INSIDE _____

NAME OF BIDDER_____

County of Erie

DIVISION OF PURCHASE

INSTRUCTIONS TO BIDDERS (FORMAL)

1. BID SHALL BE SUBMITTED ON THESE COUNTY OF ERIE BID FORMS or bid will not be considered. Bid must be typed or printed in ink. Original autograph signatures in ink are required. Facsimile or rubber stamp signatures will not be accepted. ALL PAGES OF THIS BID DOCUMENT MUST BE RETURNED INTACT.

2. LATE PROPOSALS. Any bids received in the Erie County Division of Purchase after the date and time prescribed will not be considered for contract award.

3. EMERGENCY CLOSINGS. In the event the closing of certain County facilities and/or operations and/or services due to any flood, fire, fire drill, power failure, uncontrolled weather conditions or other cause beyond the Division of Purchase control, only bids received in the Division of Purchase prior to the date and time or postmarked as of the date prescribed will be considered for contract award.

4. ANY CHANGE IN WORDING OR INTERLINEATION BY A BIDDER OF THE INQUIRY AS PUBLISHED BY THE COUNTY OF ERIE shall be reason to reject the proposal of such bidder, or in the event that such change in the Invitation to Bid is not discovered prior to entering into a contract, to void any contract entered into pursuant to such bid.

5. THE COUNTY RESERVES THE RIGHT TO REJECT any and all bids, to accept either in whole or in part anyone bid or combination of bids, as may be provided in the bid specifications, or to waive any informalities in bids. The County does not obligate itself to accept the lowest or any other proposal.

6. AWARD TO THE LOWEST RESPONSIBLE BIDDER. For the purpose of determining which bidder is the lowest qualified responsible bidder, it shall be the lowest three bidders' responsibility, within FIVE DAYS of being so notified by the Division of Purchase, to present information and documentation to the Division of Purchase, to satisfy the County that the bidder possesses sufficient capital resources, skill, judgment and experience to perform the work or deliver the material, as per bid specifications.

7. CONTRACT(S) OR PURCHASE ORDER(S) WILL BE AWARDED after due consideration of the suitability of goods and/or services bid to satisfy these specifications, the total cost of such goods and/or services including all cost elements, and the timeliness of the agreed upon delivery date.

8. This EXECUTORY CLAUSE shall be a part of any agreement entered into pursuant to this bid:

   IT IS UNDERSTOOD BY THE PARTIES THAT THIS AGREEMENT SHALL BE EXECUTORY ONLY TO THE EXTENT OF THE MONIES AVAILABLE TO THE COUNTY OF ERIE AND APPROPRIATED THEREFOR, AND NO LIABILITY ON ACCOUNT THEREOF SHALL BE INCURRED BYTHE COUNTY BEYOND THE MONIES AVAILABLE AND APPROPRIATED FOR THE PURPOSE THEREOF.

9. FAILURE TO MEET DELIVERY SCHEDULE as per accepted bid may result in legal action by the County of Erie to recover damages.

10. PRICES SHALL BE QUOTED F.O.B. DESTINATION AND DELIVERED INSIDE. "Tailgate delivery" will not be accepted unless specified by the County.

11. COLLECT TRANSPORTATION CHARGES WILL NOT BE PAID BYTHE COUNTY. All freight, cartage, rigging, postage or other transportation charges shall be prepaid and included in the bid. There will be no additional charges for delivery.

County of Erie

DIVISION OF PURCHASE

12. NO TAXES ARE TO BE BILLED TO THE COUNTY. Bids shall not include any Federal, State, or local excise, sales, transportation, or other tax, unless Federal or State law specifically levies such tax on purchases made by a political subdivision. The County of Erie Purchase Order is an exemption certificate. Any applicable taxes from which the County is not exempt shall be listed separately as cost elements, and added into the total net bid.

13. THE SUCCESSFUL BIDDER shall comply with all laws, rules, regulations and ordinances of the Federal Government, the State of New York and any other political subdivision of regulatory body which may apply to its performance under this contract.

14. GRATUITIES, ILLEGAL OR IMPROPER SCHEMES. The County may terminate this agreement if it is determined that gratuities in the form of entertainment, gifts or otherwise were offered or given by a vendor, his agent or representative to any County official or employee with a view towards securing favorable treatment with respect to the awarding of this bid or the performance of this agreement. The County may also terminate this agreement if it is determined that the successful bidder engaged in any other illegal or improper scheme promotive of favoritism or unfairness incidental to the bidding process or the performance of this agreement. In the event that it is determined that said improper or illegal acts occurred, the County shall be entitled to terminate this agreement and/or exercise any other remedy available to it under existing law.

15. INSURANCE shall be procured by the Successful Bidder before commencing work, no later than 14 days after notice of award and maintained without interruption for the duration of the Contract, in the kinds and amounts specified in Exhibit IC, unless otherwise stipulated in these Bid Specifications. IF THE INSURANCE IS NOT PROVIDED IN ACCEPTABLE FORM WITHIN THIS PERIOD OF TIME, THEN THE DIRECTOR OF PURCHASE MAY DECLARE THE VENDOR NONRESPONSIVE AND AWARD THE CONTRACT TO THE NEXT LOW RESPONSIBLE BIDDER.

    CERTIFICATES OF INSURANCE shall be furnished by the successful bidder on Erie County Standard Insurance Certificate, Exhibit IC.

16. ANY CASH DISCOUNT which is part of bid will be considered as a reduction in the bid prices in determining the award of the bid. Date of invoice must not precede date of delivery. The County policy is to pay all claims in a timely manner within the specified time. However, if for some reason payment is delayed, the County will take the discount when payment is made. The County will not pay any interest charges, nor refund discount amounts taken after the discount period. If this is unsatisfactory, please quote net.

17. CHANGES IN THE WORK. The County may, as the need arises, through the Director of Purchase, order changes in the work through additions, deletions, or modifications without invalidating the contract. Compensation, as it may be affected by any change, shall be adjusted by agreement between the contractor and County through the Director of Purchase.

18. BID OFFERING MATERIAL OTHER THAN THAT OF SPECIFIED MANUFACTURER OR TRADE NAME will be considered unless stated otherwise. The use of the name of a particular manufacturer, trade name, or brand in describing an item does not restrict a bidder to that manufacturer or specific article. However, the substituted article on which a proposal is submitted must be of such character or quality that it would serve the purpose for which it is to be used equally well as the manufacturer or brand specified. Proposals will be accepted in accordance with specifications on file or approved equal.

County of Erie

DIVISION OF PURCHASE

19. IF MATERIAL OR SERVICES OTHER THAN THOSE SPECIFIED IN THIS BID DOCUMENT ARE OFFERED, the bidder must so state and furnish at the time of bid opening, if so requested, and as part of his bid the following information in duplicate:

    (a) Complete description of the item offered, and detailed explanation of the differences between the item specified and the item offered. If, in the opinion of the Division of Purchase, sufficient detail is not presented as a part of the sealed bid to permit definitive evaluation of any substitute item, the bid will not be considered.
    (b) Descriptive literature of item offered, for evaluation.
    (c) List of installations in Erie County of the item offered.
    (d) List of other installations.

20. ANY ADDITIONAL INFORMATION for which bidder desires to add to the bid shall be written on a separate sheet of paper, attached to and submitted with the formal sealed bid, to be read at the formal opening.

21. WORKMANSHIP MUST MEET WITH THE APPROVAL OF THE DEPARTMENT HEAD(S) INVOLVED, AND SHALL BE FIRST CLASS in every respect without exception and shall be equal to the best modern practices. Materials furnished are to be new and unused. All materials furnished or work performed are to be guaranteed free from defects. Anything found defective or not meeting specifications, no matter in what stage of completion may be rejected and shall be made good by the contractor at his own expense.

22. CONTRACTOR SHALL CLEAN UP and remove all debris and rubbish resulting from the work and leave the premises broom clean to the approval of the department head.

23. THIS BID IS FIRM AND IRREVOCABLE for a period of 45 days from the date and time of the bid opening. If a contract is not awarded within the 45 day period, a bidder to whom the bid has not been awarded, may withdraw his bid by serving written notice of his intention to do so upon the Division of Purchase. Upon withdrawal of the bid pursuant to this paragraph, the Division of Purchase will forthwith return the bidder's security deposit.

24. PRICES CHARGED TO THE COUNTY OF ERIE are to be no higher than those offered to any other governmental or commercial consumer. If a bidder has a New York State or a Federal GSA contract for any of the items covered in this bid or any similar items, he shall so indicate that he has said contract on these bid papers and automatically supply a copy of this contract within five days after notification of award.

25. PRICE IS FIRM. The unit prices bid shall remain firm, and any other charges bid shall also remain firm, for delivery of the equipment, material, work, or services described in this bid. No cost increase shall be charged for any reason whatsoever.

26. EXTENSION OF PRICE PROTECTION. Any contract entered into pursuant to this bid to supply the County's requirements of goods and/or services for a definite period of time as stated in the attached specifications may be extended for not more than two successive periods of equal length at the same bid price upon the mutual agreement of the successful bidder and the County. All extensions shall be submitted in writing and shall have prior approval by the County of Erie, Director of Purchase.

County of Erie

DIVISION OF PURCHASE

27. IN EXECUTING THIS BID, THE BIDDER AFFIRMS that all of the requirements of the specifications are understood and accepted by the bidder, and that the prices quoted include all required materials and services. The undersigned has checked all of the bid figures, and understands that the County will not be responsible for any errors or omissions on the part of the undersigned in preparing this bid. Mistakes or errors in the estimates, calculations or preparation of the bid shall not be grounds for the withdrawal or correction of the bid or bid security. In case of error in extension of prices in the bid, the unit price will govern.

28. ACCOUNTABILITY. The undersigned shall be fully accountable for his or its performance under this bid, or any contract entered into pursuant to this bid, and agrees that he, or its officers, will answer under oath all questions relevant to the performance thereof and to any transaction, act or omission had, done or omitted in connection therewith if called before any Judicial, County or State officer or agency empowered to investigate the contract or his performance.

29. TERMINATION OF CONTRACT:
    a. At its option, the County may at any time for any reason terminate this agreement and the Contractor shall immediately cease all work under the agreement upon receipt of written notice of such termination from the County.
    b. In the event of termination for any reason other than the fault of the Contractor, or the nonavailability of funds as provided in the above Executory Clause, the Contractor shall be paid the amount due to date of termination, and all reasonable expenses caused by such termination.

30. THE SUCCESSFUL BIDDER TO WHOM THE BID IS AWARDED SHALL INDEMNIFY AND HOLD HARMLESS the County of Erie and its agents and employees from and against all claims, damages, losses or causes of action arising out of or resulting from such vendor's performance pursuant to this bid.

31 .STATUS AS AN INDEPENDENT CONTRACTOR: The successful Bidder to whom the bid is awarded and the County agree that the Bidder and its officers, employees, agents, contractors, subcontractors and/or consultants are independent contractors and not employees of the County or any department, agency or unit thereof. In accordance with their status as independent contractors, the Bidder covenants and agrees that neither the Bidder nor any of its officers, employees, agents, contractors, subcontractors and/or consultants will hold themselves out as, or claim to be, officers or employees of the County or any department, agency or unit thereof.

32. GOVERNED BY NEW YORK LAW: This Agreement shall be construed and enforced in accordance with the laws of the State of New York. In addition, the parties hereby agree that for any cause of action arising out of this Agreement shall be brought in the County of Erie.

County of Erie

DIVISION OF PURCHASE

To facilitate correct drawing and execution of contract, bidder shall supply full information concerning legal status:

FIRMNAME _____

ADDRESS OF PRINCIPAL OFFICE STREET _____

CITY _____

AREA CODE _____ PHONE _____ STATE _____ ZIP _____

Check one: CORPORATION_____ PARTNERSHIP_____ INDIVIDUAL _____

INCORPORATED UNDER THE LAWS OF THE STATE OF _____

If foreign corporation, state if authorized to do business in the State of New York:

YES_____ NO _____

TRADENAMES: _____

ADDRESS OF LOCAL OFFICE STREET _____

CITY _____

AREA CODE _____ PHONE _____ STATE _____ ZIP _____

NAMES AND ADDRESSES OF PARTNERS:

_____ _____

_____ _____

_____ _____

_____ _____

COUNTY OF ERIE

MARK C. POLONCARZ
COUNTY EXECUTIVE
DIVISION OF PURCHASE

ASSIGNMENT OF PUBLIC CONTRACTS

GENERAL MUNICIPAL LAW -Section 109:

1. A clause shall be inserted in all specifications of contracts hereafter made or awarded by an officer, board or agency of a political subdivision, or any district therein, prohibiting any contractor, to whom any contract shall be let, granted or awarded, as required by law, from assigning, transferring, conveying, subletting or otherwise disposing of the same, or of his right, title or interest therein, or his power to execute such contract, to any other person or corporation without the previous consent in writing of the officer, board or agency awarding the contract.

2. If any contractor, to whom any contract is let, granted, or awarded, as required by law, by any officer, board or agency of a political subdivision, or of any district therein, without the previous written consent specified in subdivision one (1) of this section, assign, transfer, convey, sublet or otherwise dispose of such contract, or his right, title or interest therein, or his power to execute such contract to any other person or corporation, the officer, board or agency which let, made, granted or awarded such contract shall revoke and annul such contract, and the political subdivision or district therein, as the case may be, and such officer, board or agency shall be relieved and discharged from all liability and obligations growing out of such contract to such contractor, and to the person or corporation to which such contract shall have been assigned, transferred, conveyed, sublet or otherwise disposed of, and such contractor, and his assignee, transferee or sublessee shall forfeit and lose all monies, theretofore earned under such contract, except so much as may be required to pay his employees. The provisions of this section shall not hinder, prevent or affect any assignment by any such contractor for the benefit of his creditors made pursuant to the laws of the State.

   NO ASSIGNMENT OF ANY AGREEMENT pursuant to this bid shall be made without specific prior approval, in writing, by the Erie County Director of Purchase.

(Rev. 1/00)

EXHIBIT "B"

COUNTY OF ERIE

MARK C. POLONCARZ
COUNTY EXECUTIVE
DIVISION OF PURCHASE

PURCHASES BY OTHER LOCAL GOVERNMENTS OR SPECIAL DISTRICTS

The Erie County Legislature has adopted the following resolution for the purpose of allowing the following-named local governmental or school districts to make purchases through the County bidding procedures.

Under the following conditions, the Director of Purchase may make purchasing services available to the following 88 participants:

1. When in the opinion of the Director of Purchase it will not create any burden or hardship upon the County and the anticipated prices will not be adversely affected thereby, the Director is authorized when he deems appropriate and as may be requested by the participants to provide in any particular County bid specification that the participants in Erie County shall have the right to make purchases based upon the bids received by the County.

2. The County Purchase Director, within the limits of his time and manpower, shall disseminate relevant contract information to the participants.

3. The participants in County contracts will issue purchase orders directly to vendors within the specified contract period referencing the County contract involved and be liable for any payments due on such purchase orders.

Bidders shall take notice that as a condition of the award of a County contract pursuant to these specifications, the successful bidder agrees to accept the award of a similar contract with any of the participants in Erie County if called upon to do so. The County, however, will not be responsible for any debts incurred by participants pursuant to this or any other agreement.

Necessary deviations from the County's specifications in the award of a participant's contract, particularly as such deviations may relate to quantities or delivery point, shall be a matter to be resolved between the successful bidder and participants. All inquiries regarding prospective contracts shall be directed to the attention of:

AKRON CENTRAL SCHOOL DISTRICT, District Clerk, 47 Bloomingdale Ave., Akron, NY 14001
AKRON VILLAGE OF, Clerk-Treasurer, 21 Main St., Akron, NY 14001
ALDEN CENTRAL SCHOOL DISTRICT, District Clerk, 13190 Park St., Alden, NY 14004
ALDEN TOWN OF, Town Clerk, Town Hall, 11901 Broadway, Alden, NY 14004
ALDEN VILLAGE OF, Village Clerk, 13336 Broadway, Alden, NY 14004
AMHERST CENTRAL SCHOOL DISTRICT, Business Manager, 4301 Main St., Amherst, NY 14226
AMHERST TOWN OF, Highway Superintendent, Town Hall, 5583 Main St., Williamsville, NY 14221
AMHERST TOWN OF, Town Supervisor, Town Hall, 5583 Main St., Williamsville, NY 14221
ANGOLA VILLAGE OF, Clerk-Treasurer, 41 Commercial St., Angola, NY 14006

AURORA TOWN OF, Town Clerk, Town Hall, 5 S. Grove St., E. Aurora, NY 14052
BLASDELL VILLAGE OF, Clerk-Treasurer, 121 Miriam St., Blasdell, NY 14219
BOCES, ERIE #1, Clifford N Crooks Svc. Ctr., 355 Harlem Rd. West Seneca NY 14224-1892
BOCES, ERIE CATIARAUGUS #2, Assistant Superintendent, 3340 Baker Rd., Orchard Park, NY 14127
BOSTON TOWN OF, Town Clerk, Town Hall, 8500 Boston State Rd., Boston, NY 14025
BRANT TOWN OF, Town Clerk, Town Hall, Brant North Collins Rd., Brant, NY 14027
BUFFALO BOARD OF EDUCATION, Purchasing Agent, 408 City Hall, Buffalo, NY 14202
BUFFALO CITY OF, Division of Purchasing, 1901 City Hall, Buffalo, NY 14202
BUFFALO SEWER AUTHORITY, General Manager, 1038 City Hall, Buffalo, NY 14202-3378
CHEEKTOWAGA CENTRAL SCHOOL DISTRICT, 3600 Union Rd., Cheektowaga, NY 14225
CHEEKTOWAGA-MARYVALE UNION FREE SCHOOL DISTRICT, District Clerk, 1050 Maryvale Dr., Cheektowaga, NY 14225-2386
CHEEKTOWAGA-SLOAN UNION FREE SCHOOL DISTRICT, District Clerk, 166 Halstead Ave., Sloan, NY 14212-2295
CHEEKTOWAGA TOWN OF, Town Hall, Broadway & Union Rds., Cheektowaga, NY 14227
CLARENCE CENTRAL SCHOOL DISTRICT, Business Administrator, 9625 Main St., Clarence, NY 14031-2083
CLARENCE TOWN OF, Town Clerk, 1 Town Place, Clarence, NY 14031
CLEVELAND HILL FIRE DISTRICT NO.6, Secretary, 440 Cleveland Dr., Cheektowaga, NY 14225
CLEVELAND HILL U.F.S.D. @ CHEEKTOWAGA, Business Manager,i05 Mapleview Dr., Cheektowaga, NY 14225
COLDEN TOWN OF, Deputy Town Clerk, Town Hall, S-8812 State Rd., Colden, NY 14033
COLLINS TOWN OF, Supervisor, Town Hall, P.O. Box 420, Collins, NY 14035
CONCORD TOWN OF, Town Clerk, Town Hall, Springville, NY 14141-0187
DEPEW UNION FREE SCHOOL DISTRICT, District Clerk, 591 Terrace Blvd., Depew, NY 14043
DEPEW VILLAGE OF, Village Clerk, Municipal Building, 85 Manitou St., Depew, NY 14043
EAST AURORA VILLAGE OF, Village Clerk, Village Hall, 571 Main St., East Aurora, NY 14052
EDEN TOWN OF, Town Clerk, 2795 East Church St., Eden, NY 14057
EGGERTSVILLE FIRE DISTRICT, Secretary/Treasurer, 1880 Eggert Rd., Eggertsville, NY 14226-2233
ELLWOOD FIRE DISTRICT #1, Secretary, Town of Tonawanda, 1000 Englewood Ave., Kenmore, NY 14223
ELMA TOWN OF, Town Clerk, Town Hall, 1600 Bowen Rd., Elma, NY 14059
ERIE COUNTY WATER AUTHORITY, Central Processing, 3030 Union Rd., Buffalo, NY 14227
EVANS TOWN OF, Town Clerk, 42 N. Main St., Angola, NY 14006
FARNHAM VILLAGE OF, Village Clerk-Treasurer, 526 Commercial St., Farnham, NY 14061
FORKS FIRE DISTRICT #3, Commissioner, Town Cheektowaga, 3330 Broadway, Cheektowaga, NY 14227
GOWANDA VILLAGE OF, Clerk/Treasurer, 27 East Main St., Gowanda, NY 14070
GRAND ISLAND CENTRAL SCHOOL DISTRICT, District Clerk, 1100 Ransom Rd., Grand Island, NY 14072
GRAND ISLAND TOWN OF, Town Clerk, 2255 Baseline Rd., Grand Island, NY 14072
HAMBURG TOWN OF, Town Clerk, S-61 00 S. Park Ave., Hamburg, NY 14075
HAMBURG VILLAGE OF, Village Clerk/Treasurer, 100 Main St., Hamburg, NY 14075
HOLLAND FIRE DISTRICT #1, Town of Holland, Holland, NY 14080
HOLLAND TOWN OF, Town Clerk, 47 Pearl St., Holland, NY 14080
HOPEVALE UNION FREE SCHOOL DISTRICT, District Clerk, 3780 Howard Rd., Hamburg, NY 14075
IROQUOIS CENTRAL SCHOOL DISTRICT, Girdle Rd., Elma, NY 14059
KENILWORTH FIRE DISTRICT #2, Commissioner, Tn. Tonawanda, 84 Hawthorne Ave., Buffalo, NY 14223
KENMORE-TN OF TONAWANDA UNION FREE SCHOOL DISTRICT, District Clerk, 1500 Colvin Blvd., Buffalo NY 14223
KENMORE VILLAGE OF, Village Clerk-Treasurer, Municipal Building, Kenmore, NY 14217
LACKAWANNA CITY OF, City Clerk, Lackawanna City Hall, 714 Ridge Rd., Lackawanna, NY 14218
LAKE VIEW FIRE DISTRICT, Fire Commissioner, Lakeview & Burke Roads, Lake View, NY 14085
LANCASTER TOWN OF, Town Clerk, 21 Central Avenue, Lancaster, NY 14086
LANCASTER VILLAGE OF, Clerk-Treasurer, Municipal Building, 5423 Broadway, Lancaster, NY 14086
MARILLA TOWN OF, Marilla Town Hall, 1740 Two Rod Rd., Marilla, NY 14102
NEW STEAD TOWN OF, Town Clerk, Town Hall, P.O. Box 227, Akron, NY 14001
NIAGARA FRONTIER TRANSPORTATION AUTHORITY, 181 Ellicott St., Buffalo, NY 14205

NORTH COLLINS TOWN OF, Town Clerk 2015 Spruce St., North Collins, NY 14111
NORTH COLLINS VILLAGE OF, Village Clerk, 10543 Main St., North Collins, NY 14111
ORCHARD PARK CENTRAL SCHOOL DISTRICT, Asst. Supt. Bus. & Support Svcs. 3330 Baker Rd., Orchard Park, NY 14127
ORCHARD PARK TOWN OF, Town Clerk, Municipal Bldg., 4295 S. Buffalo St., Orchard Park, NY 14127
ORCHARD PARK VILLAGE OF, Clerk, Municipal Bldg., 4295 S. Buffalo St., Orchard Park, NY 14127
SARDINIA TOWN OF, Town Clerk, Town Hall, Savage Rd., Sardinia, NY 14134
SHERIDAN PARK FIRE DISTRICT NO.4, Secretary, 738 Sheridan Dr., Tonawanda, NY 14150
SLOAN VILLAGE OF, Clerk Treasurer, 425 Reiman St., Sloan, NY 14212
SNYDER VOL. FIRE DEPT., Fire Commissioner, 4531 Main Street, Snyder, NY 14226
SOUTH LINE FIRE DISTRICT#10, Fire Commissioner, 1049 S. French Rd., S. Cheektowaga, NY 14227
SOUTH WALES FIRE DISTRICT #1, SecretaryfTreasurer, P.O.Box 94, South Wales, NY 14139
SPRING BROOK FIRE DISTRICT #1, Secretary, P.O. Box 97, Spring Brook, NY 14140
SPRINGVILLE VILLAGE OF, Clerk Treasurer, Village Office, 5 W. Main St., Springville, NY 14141
SWEET HOME CENTRAL SCHOOL DISTRICT, Director Finance & Plant Svcs., 1901 Sweet Home Rd., Amherst, NY 14228
TONAWANDA CITY OF, Mayor, 200 Niagara St., Tonawanda, NY 14150
TONAWANDA CITY OF, Superintendent, 150 Fillmore Avenue,Tonawanda, NY 14150
TONAWANDA CITY SCHOOL DISTRICT, District Clerk, 100 Hinds St., Tonawanda, NY 14150-1815
TONAWANDA TOWN OF, Town Clerk, Municipal Building, Kenmore, NY 14217
U-CREST FIRE DISTRICT #4, Fire Commissioner, 255 Clover Place, Cheektowaga, NY 14225
UNION FREE SCHOOL DISTRICT, Dist. Clerk, Tn. Tonawanda, 1500 Colvin Blvd., Kenmore, NY 14223
WALDEN FIRE DISTRICT #2, Fire Commissioner, 20 Pine Ridge Road, Cheektowaga, NY 14211
WALES TOWN OF, Town Clerk, Big Tree Rd., Wales Center, NY 14169
WEST SENECA CENTRAL SCHOOL DISTRICT, District Treasurer, 1397 Orchard Park Rd., West Seneca, NY 14224-4098
WEST SENECA FIRE DISTRICT #4, Fire Commissioner, 100 Lein Rd., West Seneca, NY 14224
WEST SENECA FIRE DISTRICT #5, Fire Commissioner, 2801 Seneca St., West Seneca, NY 14224
WEST SENECA TOWN OF, Town Clerk, 1250 Union Road, West Seneca, NY 14224
WILLIAMSVILLE CENTRAL SCHOOL DISTRICT, District Clerk, 105 Casey Rd, PO Box 5000, East Amherst NY 14051
WILLIAMSVILLE VILLAGE OF, 5565 Main St., Williamsville, NY 14231-1557
WYOMING, COUNTY OF, Office of the Board of Supervisors, 143 N Main St., Warsaw, NY 14569

REV. 7/09

Erie County Equal Pay Certification

In order to comply with Executive Order 13 dated November 6, 2014, we hereby certify that we are in compliance with federal law, including the Equal Pay Act of 1963, Title VII of the Civil Rights Act of 1964, Federal Executive Order 11246 of September 24, 1965 and New York State Labor Law Section 194 (together " Equal Pay Law"). The average compensation for female employees is not consistently below the average compensation for male employees, taking into account mitigating factors. We understand that this certification is a material component of this contract. Violation of the provisions of Executive Order 13, which is attached hereto and made a part hereof, can constitute grounds for the immediate termination of this contract and may constitute grounds for determining that a bidder is not qualified to participate in future county contracts.

We have evaluated wages and benefits to ensure compliance with the Federal Equal Pay Law.

_____
Signature

Verification

STATE OF _____)
COUNTY OF _____) SS:
A)
_____, being duly sworn, states he or she is the owner of (or a partner in) _____, and is making the foregoing Certification and that the statements and representations made in the Certification are true to his or her own knowledge.

B)
_____, being duly sworn, states that he or she is the Name of Corporate Officer _____, of _____, Title of Corporate Officer Name of Corporation the enterprise making the foregoing Certification, that he or she has read the Certification and knows its contents, that the statements and representations made in the Certification are true to his or her own knowledge, and that the Certification is made at the direction of the Board of Directors of the Corporation.

Sworn to before me this _____
Day of _____, 20__
_____

EXHIBIT "C"

COUNTY OF ERIE

MARK C. POLONCARZ
COUNTY EXECUTIVE
DIVISION OF PURCHASE

CONSTRUCTION/RECONSTRUCTION CONTRACTS

1. DISCRIMINATION. The successful bidder agrees:

(a) that in the hiring of employees for the performance of work under this contract or any subcontract hereunder, no contractor, subcontractor, nor any person acting on behalf of such contractor or subcontractor, shall by reason of race, creed, color, sex or national origin discriminate against any citizen of the State of New York who is qualified and available to perform the work to which the employment relates;

(b) that no contractor, subcontractor, nor any person on his behalf shall, in any manner, discriminate against or intimidate any employee hired for the performance of work under this contract on account of race, creed, color, sex or national origin;

(c) that there may be deducted from the amount payable to the contractor by the County of Erie under this contract a penalty of fifty dollars for each person for each calendar day during which such person was discriminated against or intimidated in violation of the provisions of the contract;

(d) that this contract may be cancelled or terminated by the County of Erie and all monies due or to become due hereunder may be forfeited, for a second or any subsequent violation of the terms or conditions of this section of the contract; and

(e) the aforesaid provisions of this section covering every contract for or on behalf of the County of Erie for the manufacture, sale or distribution of materials, equipment or supplies shall be limited to operations performed within the territorial limits of the State of New York.

(N.Y. State Labor Law Article 8 Section 220-e)

(f) Provisions of the State Law Against Discrimination also prohibit discrimination in employment because of age.

2. CONSTRUCTION, RECONSTRUCTION, OR REPAIR CONTRACTS FOR PUBLIC WORKS FACILITIES are subject to minimum wage rates, as established by the State of New York Department of Labor. The successful bidder on any contract for public works to which the provisions of the New York State Labor Law Article 8 apply agrees that:

(a) No laborer, workman or mechanic in the employ of the contractor, subcontractor or other person doing or contracting to do the whole or a part of the work contemplated by the contract shall be permitted or required to work more than eight hours in anyone calendar day or more than five days in anyone week except in cases of extraordinary emergency including fire, flood or danger to life or property. (Section 220, subd. 2, N.Y. State Labor Law)

(b) Each laborer, workman or mechanic employed by the contractor, subcontractor or other person doing or contracting to do the whole or part of the work contemplated by the contract shall be paid not less than the hourly minimum rate of wage and provided supplements not less than the prevailing supplements as designated by the New York State Industrial Commission. (Section 220, subd. 3, NY. State Labor Law)

Wage and supplement rates are on file in the Division of Purchase.

3. AFFIRMATIVE ACTION PROGRAM AFFECTING CONSTRUCTION CONTRACTS. The Erie County Legislature has adopted a resolution directing that County Construction Contracts require the contractor to take affirmative action to secure equal opportunity for minority group workers and to comply with the Affirmative Action Program of the County of Erie. The Legislative resolution provides that a contract for the purchase of equipment involving installation work by building trade employees shall be considered a construction contract if the number of such employees on the job site shall at any time exceed ten (10). If the contractor intends to have more than ten (10) such employees on the job site at any one time, it shall be the contractor's obligation to make a written request to the Director of the Division of Purchase for a copy of the special conditions pertaining to affirmative action. The contractor shall not, at any time, place more than ten (10) such employees on the job site except in compliance with the said resolution and the said special conditions.

EXHIBIT "G"

County of Erie

DIVISION OF PURCHASE

NON-COLLUSIVE BIDDING CERTIFICATION

By submission of this bid, each bidder and each person signing on behalf of any bidder certifies, and in the case of a joint bid each party thereto certifies as to its own organization, under penalty of perjury, that to the best of his knowledge and belief:

(1) the prices in this bid have been arrived at independently without collusion, consultation, communication, or agreement, for the purpose of restricting competition, as to any matter relating to such prices with any other bidder or any competitor;

(2) unless otherwise required by law, the prices which have been quoted in this bid have not been knowingly disclosed by the bidder and will not knowingly be disclosed by the bidder prior to opening, directly or indirectly, to any other bidder or to any competitor; and

(3) no attempt has been made or will be made by the bidder to induce any other person, partnership or corporation to submit or not to submit a bid for the purpose of restricting competition.

NOTICE

(Penal Law, Section 210.45)

IT IS A CRIME, PUNISHABLE AS A CLASS A MISDEMEANOR UNDER THE LAWS OF THE STATE OF NEW YORK, FOR A PERSON, IN AND BY A WRITTEN INSTRUMENT, TO KNOWINGLY MAKE A FALSE STATEMENT, OR TO MAKE A FALSE STATEMENT, OR TO MAKE A STATEMENT WHICH SUCH PERSON DOES NOT BELIEVE TO BE TRUE.

BID NOT ACCEPTABLE WITHOUT FOLLOWING CERTIFICATION:

Affirmed under penalty of perjury this _____day of _____, 20 _____

TERMS _____ DELIVERY DATE AT DESTINATION _____

FIRM NAME _____

ADDRESS _____

_____ ZIP_____

AUTHORIZED SIGNATURE _____

TYPED NAME OF AUTHORIZED SIGNATURE _____

TITLE _____ TELEPHONE NO. _____

EXHIBIT "H"

COUNTY OF ERIE

MARK C. POLONCARZ
COUNTY EXECUTIVE
DIVISION OF PURCHASE

MBE/WBE COMMITMENT

The Erie County Legislature enacted Local Law No.5 requiring a minority and women-owned business utilization commitment by persons or firms contracting with the County of Erie for supplies, materials, equipment, and insurance.

SECTION 1.

A. The supplier of all purchase contracts involving an expenditure of more than $15,000.00 shall take affirmative action to utilize bona fide minority business enterprises (MBE) and women business enterprises (WBE) on all contracts with the County. Affirmative action shall include, but not limited to:

1. Utilizing a source list of MBEs and WBEs; and
2. Solicitation of bids from MBEs and WBEs; and
3. Providing MBEs and WBEs sufficient time to submit proposals in response to solicitations; and
4. Maintaining records showing utilization of MBEs and/or WBEs specific efforts to identify and utilize these companies; and
5. A goal of awarding at least ten percent (10%) of the total dollar value of the contract to MBEs and at least two percent (2%) of the total dollar value of the contract to WBEs or, for those contracts governed by federal or state regulations with respect to MBE and/or WBE hiring the prevailing percentage set forth therein, whichever is higher, subject to waiver as provided below.

B. All bidders must submit, with a bid, a list of all MBEs and WBEs from whom the supplier has solicited bids, or with whom the supplier has signed a binding contractual agreement, or with whom the contractor is presently negotiating an agreement, for the purpose of meeting the MBE and WBE utilization goals provided in subdivision (A) (5) above. A supplier's bid shall not be considered where the supplier fails to submit a list as provided for herein. A supplier's bid shall not be considered where examination of said list of MBEs and WBEs evidences failure by the supplier to comply with the affirmative action requirements provided herein, except that the County may, upon written request by the supplier, grant a complete or partial waiver of the provisions of subdivision (A) (5) where the availability of MBEs and/or WBEs in the market area of the contract is less than the ten percent (10%) MBE goal and two percent (2%) WBE goal.

C. As evidence of compliance with the goals set forth in subdivision (A) (5) above, the supplier shall submit to the Director or Purchasing, at the bid opening, a schedule for MBE and WBE participation listing the MBEs and WBEs with whom the supplier intends to utilize; specifying the agreed upon price to be paid for such goods and identifying in detail the contract item or items to be supplied by each MBE and WBE. A copy of the participating schedule will be forwarded to the Division of E.E.O. from the Division of Purchasing. Contingent upon a contract award, a letter of intent to enter into a purchase agreement, signed by both the supplier and the MBE and WBE (unless a waiver is requested in one of those categories), indicating the agreed upon price

and scope of work, shall be provided.

D. As evidence of compliance with the goals set forth in subdivision (A) (5) above, the supplier shall provide to the County Division of E.E.O., copies of all the subcontracts and/or purchase agreements with the MBEs and WBEs within fifteen (15) days of contract award.

E. For the purpose of this section, the term "minority business enterprise" shall mean a business which performs a commercially useful function, at least fifty-one percent (51 %) of which is owned by minority group members or, in the case of a publicly-owned business, at least fifty-one percent (51 %) of all stock is owned by minority group members. Such ownership shall be certified by the County Division of E.E.O.

For the purposes of this paragraph, "minority group members" are citizens of the United States who are African-American, Hispanic, Asian-American and American-Indian.

F. For the purposes of this section, the term "women-owned business enterprise" shall mean a business which performs a commercially useful function, at least fifty-one percent (51 %) of which is owned by a woman or women or, in the case of publicly-owned business, at lest fifty-one percent (51 %) of all stock is owned by a woman or women. Such ownership shall be certified by the County Division of E.E.O.

NOTE:

It is the prime vendor's responsibility to obtain MBE/WBE vendors and NOT the County of Erie. However, some vendors may be obtained from:

Director
Erie County Division of E.E.O.
95 Franklin Street
6TH Floor Buffalo, NY 14202
(716) 858-7542

(01/09)

BID WILL NOT BE CONSIDERED IF THIS FORM IS NOT SUBMITTED WITH BID AS REQUIRED, REGARDLESS OF THE BID AMOUNT.

BID NO.:_____

BID DATE:_____

ERIE COUNTY MINORITY/WOMEN BUSINESS ENTERPRISE
UTILIZATION REPORT – PART A

COMPANY:_____

AUTHORIZED REPRESENTATIVE:_____

ADDRESS:_____

TELEPHONE NUMBER: (____) _____

BID NAME:_____

I. List actions taken to identify, solicit, and contact Minority Business Enterprises (MBE)/Women Business Enterprises (WBE) to bid on subcontracts for this project.

1.
2.
3.
4.
5.
6.

II. List all bona fide Minority/Women Business Enterprise subcontractors and suppliers solicited, contracted, or presently negotiating a contract in accordance with the minority business utilization goal set forth by the County of Erie. (Attach additional sheets if necessary.)

MBE/WBE OWNED FIRMS	SUPPLY/SERVICE	AMOUNT OF PROPOSAL	PRIOR CERTIFICATION	CONTRACT EXECUTED	REASON IF CONTRACT NOT AWARDED
Name: _____ Address:_____ _____ Telephone No. _____ IRS #_____				YES_____ NO _____	
Name: _____ Address:_____ _____ Telephone No. _____ IRS #_____				YES_____ NO _____	

MBE/WBE OWNED FIRMS	SUPPLY/SERVICE	AMOUNT OF PROPOSAL	PRIOR CERTIFICATION	CONTRACT EXECUTED	REASON IF CONTRACT NOT AWARDED
Name: _____ Address:_____ _____ Telephone No. _____ IRS #_____				YES_____ NO _____	
Name: _____ Address:_____ _____ Telephone No. _____ IRS #_____				YES_____ NO _____	
Name: _____ Address:_____ _____ Telephone No. _____ IRS #_____				YES_____ NO _____	

III. Total Dollar Amount to be subcontracted to
Minority Business Enterprise(s). $
Women Business Enterprise(s). $

IV. Total Amount of Bid $

V. MBE Percent (%) of Project bid %
WBE Percent (%) of Project bid %

VI. YOU MUST ATTACH COPIES OF RELEVENT CORRESPONDENCE AND DOCUMENTS, INCLUDING RETURN RECEIPTS.

_____

SIGNATURE OF AUTHORIZED REPRESENTIVE DATE

(01/09)

MBE/WBE UTILIZATION REPORT – PART B

FINAL CERTIFICATION OF EXPEDITURES TO MBEs/WBEs

(To be completed by the prime vendor and submitted to the
Erie County Division of E.E.O. when contract is complete)

Erie County reserves the right to require documentation, including,
But not limited to, cancelled checks to verify these amounts.

VENDOR:_____ BID NO._____

_____

MBE TOTAL AMOUNT EXPENDED

_____

_____

WBE TOTAL AMOUNT EXPENDED

_____

_____

TOTAL OF ALL MBE SUBCONTRACTS	$_____
TOTAL OF ALL WOMEN SUBCONTRACTS	$_____
AMOUNT OF CONTRACT (PRIME)	$_____
FINAL MBE PERCENTAGE	$_____
FINAL WBE PERCENTAGE	$_____

I _____, as an official representative of _____, do hereby certify that the information listed above is correct and complete.

SIGNATURE TITLE DATE

MAIL TO: Erie County Division of E.E.O.
95 Franklin Street
6th Floor
Buffalo, NY 14202

(01/09)

WAIVER RECOMMENDATION

COMPANY: X_____

ADDRESS: X._____

TELEPHONE NUMBER: (X_____) _____ BID NO.:_____

1. Vendor has made a good faith *effort* to subcontract on this bid for which minority/women's business enterprises bids could be solicited; and

2. The total percentage of the bid which could be subcontracted for which minority business enterprises bids could be solicited is less than 10% for MBEs and/or 2% WBEs.

A waiver as provided for by Erie County Local Law, is hereby requested on the grounds that there are no/insufficient (circle the 9Ppropriate term) minority/women's business enterprises in the market area of this bid.

1. _____ 6. _____

2. _____ 7. _____

3. _____ 8. _____

4. _____ 9. _____

5. _____ 10. _____

(Use additional sheet if necessary.)

If a partial waiver is granted, the Vendor will make a good faith to meet the reduced goal.

_____

DATE SIGNATURE OF AUTHORIZED COMPANY REPRESENTATIVE

Granted in Whole: _____

Granted in Part: _____

Comments:

_____

_____

_____

DIRECTOR OF E.E.O. DATE

(01/09)

CLASSIFICATION A:
Construction or Maintenance

County of Erie

STANDARD INSURANCE REQUIREMENTS

Vendors Insurance Classification A: Contracts Involving Construction or Maintenance

1. The contractor shall obtain, at his own cost and expense, the following insurance coverages with insurance companies licensed in the State of New York and shall provide a certificate of insurance as evidence of such coverages on the County of Erie Standard Insurance Certificate.

A. Commercial General Liability -with a minimum combined single limit of liability for Bodily Injury and Property Damage of $1 ,000,000 per occurrence and $2,000,000 general aggregate and $2,000,000 Products -Completed Operation Aggregate. The coverage shall include:

- Premises and Operations
- Products and Completed Operations
- Independent Contractors
- Blanket Broad Form Contractual Liability (sufficient to cover all liability assumed under contracts with the County of Erie)
- Broad Form Property Damage
- Explosion, Collapse and Underground Hazards (x, c, u) must NOT be excluded.

B. Automobile Liability -with a minimum combined single limit of liability for Bodily Injury and Property Damage of $1,000,000 each occurrence. The coverage shall include Owned, Hired, and Non-Owned Autos (Symbol "1" should be designated for Liability coverage on the Business Auto Policy).

C. Excess "Umbrella" Liability -with a minimum limit of $5,000,000 each occurrence /$5,000,000 aggregate.

D. Worker's Compensation and Employer's Liability -providing statutory coverage in compliance with the Worker's Compensation Law of the State of New York (Form C-105.2).

E. Disability Benefits -providing statutory coverage in compliance with the New York State Disability Benefits Law (Forms DB-120.1 or DB-155).

Failure to maintain coverage herein shall constitute a material breach of this contract and the Contractor shall suspend all work immediately upon such lapse in coverage.

2. Commercial General Liability, Automobile Liability and Excess "Umbrella" Liability shall name the County of Erie and any Board, Bureau, Commission or Agency thereof as additional insureds on ISO Form CG 2010 1185 Edition. Coverage should be provided on a primary and non-contributory bases. Designated Construction Project General Aggregate Limit Per Person Endorsement CG 2503 is required. Waiver of Subrogation is required on all lines in favor of Erie County.

3. All policies in which the County of Erie is named as an additional insured shall provide that:

A. The insurance company or companies issuing the policies shall have no recourse against the County of Erie for payment of any premiums or for assessments under any form of policy.

B. The insurance shall apply separately to each insured (except with respect to the limit of the liability).

4. Prior to cancellation, non-renewal or material change of the above policies, at least forty-five (45) days advance written notice shall be given to the County of Erie, Department of Law, 95 Franklin Street, Room 1634, Buffalo, N.Y. 14202, and the Agency requesting the certificate.

5. All certificates of insurance shall be approved by the Erie County Department of Law prior to the inception of any work.

6. The "ACCORD" form certificate may be used in place of the Erie County Standard Insurance Certificate, provided that all of the requirements set forth in the instructions for the Erie County Standard Insurance Certificate are incorporated into the "ACCORD" form certificate.

County of Erie Standard Insurance Certificate

THIS CERTIFICATE IS ISSUED AS A MATTER OF INFORMATION ONLY AND CONFERS NO RIGHTS UPON THE CERTIFICATION HOLDER. THIS CERTIFICATE DOES NOT AFFIRMATIVELY OR NEGATIVELY AMEND, EXTEND, OR ALTER THE COVERAGE AFFORDED BY THE POLICIES BELOW. THIS CERTIFICATE OF INSURANCE DOES NOT CONSTITUE A CONTRACT BEWTEEN THE ISSUING INSURER(S), AUTHORIZED REPRESENTATIVE OR PRODUCER, AND THE CERTIFICATE HOLDER.

IMPORTANT: If the certificate holder is an ADDITIONAL INSURED, the policy(ies) must be endorsed. If SUBROGATION IS WAIVED, subject to the terms and conditions of the policy, certain policies may require an endorsement. A statement of this certificate does not confer rights to the certificate holder in lieu of such endorsement(s).

PRODUCER	CONTACT NAME	
	PHONE AC/ NO. EXT	FAX A/C NO.
	E-MAIL ADDRESS	
	PRODUCER CUSTOMER ID #	
	INSURER(S) AFFORDING COVERAGE	NAIC #
INSURED	INSURER A:	
	INSURER B:	
	INSURER C:	
	INSURER D:	
	INSURER E:	
	INSURER F:	

COVERAGES CERTIFICATE NUMBER: REVISION NUMBER:

THIS IS TO CERTIFY THAT THE POLICIES OF INSURANCE LISTED BELOW HAVE BEEN ISSUED TO THE INSURED NAME ABOVE FOR THE POLICY PERIOD INDICATED. NOTWITHSTANDING ANY REQUIREMENT, TERM OR CONDITION OF ANY CONTRACT OR OTHER DOCUMENT WITH RESPECT TO WHICH THIS CERTIFICATE MAY BE ISSUED OR MAY PERTAIN, THE INSURANCE AFFORDED BY TYE POLICIES DESCRIBED HEREIN IS SUBJECT TO ALL THE TERMS, EXCLUSIONS AND CONDITIONS OR SUCH POLICIES. LIMITS SHOWN MAY HAVE BEEN REDUCED BY PAID CLAIMS.

INSR LTR	TYPE OF INSURANCE	ADDL INSR	SUBR WVD	POLICY NUMBER	POLICY EFF MM/DD/YYYY	POLICY EXP MM/DD/YYYY	LIMITS	
	GENERAL LIABILITY ☐ COMMERCIAL GENERAL LIABILITY ☐ CLAIMS-MADE ☐ OCCUR ☐ ---------- ☐ ---------- GEN'L AGGREGATE LIMIT APPLIES PER: ☐ POLICY ☐ PROJECT ☐ LOC						EACH OCCURANCE	$
							DAMAGE TO RENTED PREMISES (Ea occurnace)	$
							MED EXP (Any one person)	$
							PERSONAL & ADV INJURY	$
							GENERAL AGGREGATE	$
							PRODUCTS COMP/OP AGG	$
								$
	AUTOMOBILE LIABILITY ☐ ANY AUTO ☐ ALL OWNED AUTOS ☐ SCHEDULED AUTOS ☐ HIRED AUTOS ☐ NON-OWNED AUTOS ☐						COMBINED SINGLE LIMIT (Ea accident)	$
							BODILY INJURY (Per person)	$
							BODILY INJURY (Per accident)	$
							PROPERTY DAMAGE (Per accident)	$
								$
								$
	☐ UMBRELLA LIAB ☐ OCCUR ☐ EXCESS LIAB ☐ CLAIMS						EACH OCCURANCE	$
							AGGREGATE	$
	☐ DEDUCTIBLE ☐ RETENSION $							

County of Erie Standard Insurance Certificate

	WORKERS COMPENSATION AND EMPLOYER'S LIABILITY ANY PROPRIETOR/PARTNER/ EXECUTIVE OFFICE/MEMBER EXCLUDED? Y/N ☐ If yes describe under DESCRIPTION OF OPERATIONS below	N/A						WC STATUTO-RY LIMITS	OTH ER	$
							E.L. EACH ACCIDENT			$
							E.L DISEASE-EA EMPLOYEE			$
							E.L DISEASE – POLICY LIMIT			$

DESCRIPTION OF OPERATIONS/LOCATIONS/VEHICLES (Attach ACCORD 101, Additional Remarks Schedule, if more space is required)

CERTIFICATE HOLDER	CANCELLATION
County of Erie 95 Franklin Street Buffalo, NY	SHOULD ANY OF THE ABOVE DESCRIBED POLICIES BE CANCELLED BEFORE THE EXPIRATION DATE THEREOF, NOTICE WILL BE DELIVERED IN ACCORDANCE WITH THE POLICY PROVISIONS. AUTHORIZED REPRESENTATIVE

X. FOR COUNTY USE ONLY:

Name of County Dept. Requesting Certificate _____

Purchase Order or Contact Number _____

Vendor Insurance Classification _____

INSTRUCTIONS FOR COUNTY OF ERIE STANDARD INSURANCE CERTIFICATE

I. Insurance shall be procured and certificates delivered before commencement of work or delivery of merchandise or equipment.

II. CERTIFICATES OF INSURANCE

A. Shall be made to the "County of Erie. 95 Franklin St, Buffalo NY, 14202"

B. Coverage must comply with all specifications of the contract.

C. Must be executed by an Insurance company, agency or broker, which is licensed by the Insurance Department of the Slate of New York. If executed by a broker, notarized copy of authorization to bind or certify coverage must be attached,

III. Forward the completed certificate to: County of Erie, (Department or Division) responsible for entering into the agreement for construction, purchase, lease or service,

IV. Minimum coverage with limits are as follows:

Vendor Classification	A Construction and Maintenance	B Purchase or Lease Of Merchandise or Equipment	C Professional Services	D Property Leased To Others Or Use Of Facilities Or Grounds	E Concession-aires Services	F Livery Services	G All Purposes Public Entity Contracts
Commercial Gen. Liab.	$1,000,000 per occ	$1,000,000 CSL	$1,000,000 CSL	$1,000,000	$1,000,000 CSL	$1,000,000	$1,000,000 CSL
General Aggregate	$2,000,000	$2,000,000	$2,000,000	$2,000,000	$2,000,000	$2,000,000	$2,000,000
Products Completed Operations Liability	$2,000,000	$2,000,000	$2,000,000	$2,000,000	$2,000,000	$2,000,000	$2,000,000
Blanket Broad Form Contractual Liability	INCLUDE						
Contractual Liability		INCLUDE	INCLUDE	INCLUDE	INCLUDE	INCLUDE	INCLUDE
Broad Form PD	INCLUDE						
X.C.U. (explosion, collapse, underground)	INCLUDE						
Liquor Law				INCLUDE	INCLUDE		
Auto Liab.	$1,000,000 CSL		$1,000,000 CSL	$1,000,000 CSL	$1,000,000 CSL	$1,000,000 CSL	$1,000,000 CSL
Owned	INCLUDE		INCLUDE	INCLUDE	INCLUDE	INCLUDE	INCLUDE
Hired	INCLUDE		INCLUDE	INCLUDE	INCLUDE	INCLUDE	INCLUDE
Non-Owned	INCLUDE		INCLUDE	INCLUDE	INCLUDE	INCLUDE	INCLUDE
Excess/Umbrell a Liab.	$5,000,000	$1,000,000	$1,000,000	$1,000,000	$1,000,000	$1,000,000	$1,000,000
Worker's Compensation & Employer's Liability	STATUTORY	STATUTORY	STATUTORY	STATUTORY	STATUTORY	STATUTORY	STATUTORY
Disability Benefits	STATUTORY	STATUTORY	STATUTORY	STATUTORY	STATUTORY	STATUTORY	STATUTORY
Professional Liability	STATUTORY	STATUTORY	STATUTORY	STATUTORY	STATUTORY	STATUTORY	STATUTORY

Erie County, To Be Named Add'l Insd.	STATUTORY	STATUTORY	STATUTORY	STATUTORY	STATUTORY	STATUTORY	STATUTORY

V. Construction contracts require excess Umbrella Liability limits of $5,000,000

VI. Coverage must be provided on a primary-non contributory bases.

VII. Designated Construction Project General Aggregate Limit Per Project Endorsement CG 25 03 is required. In the event the concessionaire is required to have a N.Y.S. license to dispense alcoholic beverages an endorsement for liquor liability is required.

VIII. Waiver of Subrogation: Required on all lines unless noted

X. Transportation of people in buses, vans or station wagons requires $5,000,000 excess liability,

XI. Workers Compensation: State Workers' Compensation/Disability Benefits law

Use Applicable Certificates Below:

Workers Compensation Forms

CE-200	Exemption
C105.2	Commercial Insurer
SI-12	Self Insurer
GSI-105.2	Group Self Insured
U-26.3	New York State Insurance Fund

DBL (Disability Benefits Law) Forms

CE-200	Exemption
DB-120.1	Insurers
DB-155	Self Insurer

XII. The "ACORD" form certificates may be used in place of the County of Erie Standard Insurance Certificate, provided that all of the above referenced requirements are incorporated into the "ACORD" form certificate.

:

Specifications and Proposal Form Covering
Construction and Maintenance Materials
Required by the
Erie County Department of Public Works
For the year
Beginning April 1, 2015

Table of Contents

Notice to Bidders		i
Section 200	**Earthwork**	
Section 202	Removal of Structures and Obstructions	202 – 1
Section E203	Excavation, Embankment and Sewer Line Chemical Root Control	E203 – 1
Section E204	Flowable Fill	E204 – 1
Section 206	Trench, Culvert, Structure Excavation	206 – 1
Section 207	Geosynthetics	207 – 1
Section E209	Soil Erosion and Sediment Control	E209 – 1
Section 210	Removal and Disposal of Asbestos Containing Material - ACM (Buildings, Bridges and Highways)	210 – 1
Section 300	**Bases and Subbases**	
Section E302	Bituminous Stabilized Course	E302 – 1
Section 304	Subbase Course	304 – 1
Section 400	**Hot Mix Asphalt**	
Section E402	Hot Mix Asphalt (HMA) Pavements	E402 – 1
Section E403	Hot Mix Asphalt Pavement for Municipalities	E403 – 1
Section E405	Cold Mix Bituminous Pavement (Open Graded)	E405 – 1
Section 407	Tack Coat	407 – 1
Section E410	Bituminous Surface Treatment - Single Course	E410 – 1
Section E490	Cold Milling	E490 – 1

Section 600	**Incidental Construction**	
Section E603	Culverts and Storm Drains	E603 – 1
Section E604	Drainage Structures	E604 – 1
Section E605	Underdrains	E605 – 1
Section E606	Guide Railing, Median Barrier, and Concrete Barrier	E606 – 1
Section E608	Sidewalks, Driveways, Bicycle Paths and Vegetation Control Strips	E608 – 1
Section E609	Curb and Curb & Gutter	E609 – 1
Section E610	Ground Vegetation – Preparation, Establishment and Management	E610 – 1
Section E614	Pruning, Improving and Removing Existing Vegetation	E614 – 1
Section E618	Bituminous Material	E618 – 1
Section E619	Work Zone Traffic Control	E619 – 1
Section E620	Bank and Channel Protection	E620 – 1
Section 621	Cleaning Culverts, Drainage Structures and Existing Roadside Sections	621 – 1
Section 627	Cutting Pavement	627 – 1
Section E636	Emergency Repairs	E636-1
Section E645	Signs	E645 – 1
Section E646	Delineators, Reference Markers and Snowplowing Markers	E646 – 1
Section 648	Subsurface Explorations	648 – 1
Section E655	Frames, Grates and Covers	E655 – 1
Section E680	Traffic Signals	E680 – 1
Section E685	Epoxy Reflectorized Pavement Markings	E685 – 1

Section 700	**Materials and Manufacturing**	
Section E701	Hydraulic Cements	E701 – 1
Section E703	Aggregates	E703 – 1
Section E704	Masonry Units	E704 – 1
Section 800	**Materials - Delivery**	
Section E800	Materials Delivery	E800 – 1
Section 900	**Rental of Equipment**	
Section E900	Rental Equipment	E900 – 1

NOTICE TO BIDDERS
SPECIFICATIONS AND PROPOSAL FORM COVERING
CONSTRUCTION AND MAINTENANCE MATERIALS
REQUIRED BY THE
ERIE COUNTY DEPARTMENT OF PUBLIC WORKS

FOR THE YEAR
BEGINNING APRIL 1, 2015

1. The purpose of the attached specifications is to describe the above mentioned materials by physical and chemical requirements.

2. Bids are solicited on construction and maintenance materials as shown by attached specifications and proposal form. Where noted New York State Department of Transportation Standard Specifications, Construction and Materials, dated May 1, 2008, and all addenda shall apply.

3. Purchase Orders will be issued to the lowest responsible bidder after due consideration has been given to the point of delivery, the location of the job site to which the material used will be hauled, and the cost of hauling.

4. The Purchaser reserves the right to reject any or all bids, or to accept, either in whole or in part, any one bid or combination of bids.

5. No quantities are given. Quotations on all items shall be for requirements to **MARCH 31, 2016**.

6. All references to New York State Specifications refer to the New York State Department of Transportation Standard Specifications, Construction and Materials, dated May 1, 2008 and all addenda.

7. The bid shall be signed by bidder in proper place on the last page of this proposal.

8. When a substitute material is submitted for bid, the bidder must provide, at the time of bid, a NYSDOT certification to the effect that the material is a suitable substitute or obtain pre-approval of the substitute material from Erie County Department of Public Works.

9. In submitting this bid the bidder declares that he is, or they are, the only person or persons interested in the said bid, that it is made without any connection with any person making another bid for the same materials; that the bid is in all respects fair and without collusion, fraud or mental reservation; and that no officer or employee of the County is directly or indirectly interested in said bid or in the supplies, or in any portion of the profits thereof.

   a. Each Vendor shall also furnish the County of Erie with a Certificate of Insurance indicating he is covered by Workmen's Compensation.

   b. All policies of insurance, together with endorsements thereon, must contain autograph countersignatures.

   c. No bid for materials or supplies may be accepted from or contract awarded to any vendor who is in arrears to Erie County or who has defaulted on a contract or any other obligation to Erie County.

10. The Bidder hereby agrees to the provisions of Section 103-a, 103-b and 103-d, being part of Chapter 605 of the Laws of 1959 of the General Municipal Law which requires that upon the refusal of a person, when called before a grand jury to testify concerning any transaction or contract with the state, any political sub-division, thereof, a public authority or with any public department, agency or official of the

state or of any political subdivision thereof or of a public authority, to sign a waiver of immunity against subsequent criminal prosecution or to answer any relevant question concerning such transaction or contracts

a. Such person, and any firm, partnership or corporation of which he is a member, partner, director or officer shall be disqualified from thereafter selling to or submitting bids to, or receiving awards from, or entering into any contracts with any municipal corporation or any public department, agency or official thereof, for goods, work or services, for a period of five years after such refusal, and

b. Any and all contracts made with any municipal corporation or any public department, agency or official thereof, since the effective date of this law, by such person, and by any firm, partnership, or corporation of which he is a member, partner, director or officer may be canceled or terminated by the municipal corporation without incurring any penalty or damages on account of such cancellation or termination, but any monies owed by the municipal corporation for goods delivered or work done prior to the cancellation or termination shall be paid, and

c. Every contract hereafter made or awarded by a municipal corporation or any public department, agency or official thereof or by a fire district or any agency or official thereof, pursuant to bid, for work or services performed or to be performed or goods sold or to be sold, shall contain the following statement by the bidder, under penalty of perjury: Non-collusive bidding certification. The bidder certifies that:

1). The bid has been arrived at by the bidder independently and has been submitted without collusion with any other vendor of materials, supplies, or equipment of the type described in the invitation or bids, and

2). The content of the bid has not been communicated by the bidder, nor, to its best knowledge and belief, by any of its employees or agent of the bidder or its surety on any bond furnished herewith prior to the official opening of the bid."

11. The usage of F.O. B. trucks means the product will be picked up by the Purchasers truck at the vendors plant or pit.

12. All facilities selling by weight over scales must be tested and inspected according to New York State Agriculture & Markets Law, article 16, and article 1.0 of the NYCRR and provide proof of this testing and Inspection to the County when bid is submitted, or within five (5) days thereafter, in order for bid to be accepted. If the County does not receive such verification, it will presume the scales have not been tested and inspected.

13. ECDPW FORCE ACCOUNT INVOICE REQUIREMENTS FOR THE FOLLOWING ITEMS:

- Item E636.0101 -Emergency Highway Repair Overhead and Profit -Percent (Maximum Bid 20%)
- Item E636.0102 -Emergency Bridge Repair Overhead and Profit -Percent (Maximum Bid 20%)
- Item E636.01 03 -As Directed Bridge Maintenance Work and Repair Work Overhead and Profit - Percent (Maximum Bid 20%)

Force account invoices for work done under the above items shall be prepared and submitted according to the following:

a. All documentation is to be crossed-checked for consistency before submittal to the County. Any submission found not to be sufficiently checked by the vendor prior to submission will be returned without further processing for correction.

b. All documentation is to be legible. Submissions containing illegible, cut off or mis-copied

information will be returned to the vendor for correction without further processing.

c. Billing for force account work is to be governed by the requirements of Section 109-05 B. of the NYSDOT Standard Specifications.

d. NYSDOT Force Account forms or duplicate reproductions are to be used for force account documentation.

e. Invoice materials are to be organized in an orderly fashion, i.e.:

1) Invoice cover sheet on company letterhead

2) Force Account Summation (MURK-13)

3) Force Account Equipment Summary (MURK-17)

4) Force Account Summary of Labor (MURK-12)

5) Daily time sheets including materials and equipment used (each sheet signed by contractor and a county representative) (MURK-11).

6) Certified Payroll reports

7) Equipment cost reference sheets (i.e. Blue Book, Equipment Watch, Invoice from a rental agency, etc.). The reference material for a particular piece of equipment has to have an ID number that links it to the Murk 13 and Murk 17 forms.

8) Invoices from service vendors (i.e. toilet rental, trucking, crane rental, etc.)

9) Invoices from material suppliers, cross referenced with entries on the Murk 13 form.

10) Subcontractor Invoices. If subcontractor invoices are included the subcontractor's invoices must contain all the information noted in items 1) - 9) above.

f. If any of the above invoice materials are missing, incomplete, illegible or otherwise unsuitable for review the submission will be returned to the contractor for correction without further processing.

g. Prevailing wages are to be paid on public works projects. If the wages paid to a particular worker or labor classification are not straight from the latest NYSDOL Prevailing Wage Rate listing and/or are influenced by a local labor agreement the contractor will provide documentation showing how the wage rate was arrived at and that it meets prevailing wage requirements.

Delivery time for special items on Spring Bid Book:

Glass Beads	-15 days after receipt of order
Casting, Miscellaneous	- 60 days after receipt of order
Grates and Frames	- 60 days after receipt of order
Guide Rail	- 30 days after receipt of order
Paint: Federal Yellow	- 30 days after receipt of order
Traffic Zone	- 30 days after receipt of order
Post, Wood	- 60 days after receipt of order
Prefabricated Adjustment Rings for Manholes	- 60 days after receipt of order
Culvert Pipe and Related Items	- 30 days after receipt of order

County of Erie
Division of Purchase
Edward A. Rath County Office Building
95 Franklin Street, Buffalo New York 14202

The undersigned proposes to furnish to the Erie County Department of Public Works, Division of Highways, Construction and Maintenance Materials until March 31, 2016 at the price shown, in quantities desired and in accordance with the specifications now on file in the

Respectfully submitted this _____ day of _____ 20_____

Sign Here _____
Legal Firm Name

By _____

By _____

SECTION 202 – REMOVAL OF STRUCTURES AND OBSTRUCTIONS

Section 202 of the NYSDOT Standard Specifications dated May 1, 2008, and all addenda shall apply.

Payment will be made under:

Item No.	**Item**	**Pay Unit**
202.19	Removal of Substructures	Cubic Yard

SECTION E203 – EXCAVATION, EMBANKMENT AND SEWER LINE CHEMICAL ROOT CONTROL

Section 203 of the NYSDOT Standard Specifications dated May 1, 2008, and all addenda shall apply except as modified herein.

The following shall be added:

203-1 DESCRIPTION:

203-1.01 Definitions

P. Pesticide. Shall be defined as "any substance or mixture of substances intended for preventing, destroying, or mitigating any pest and any substance or mixture of substances intended for use as a plant regulator, defoliant, or desiccant (162.3ff)" including "root control herbicides intended to prevent the growth of, or kill roots in certain sites such as sewer lines and drainage tiles (162.3ff.iv)". (Code of Federal Regulations, Title 40)

Q. Wastewater Treatment Plant. Shall be defined as any facility or facilities used to treat flows from any sewer in which the Contractor performs any work or introduces any material.

R. Wastewater Treatment Plant Operator. Shall be defined as the supervisor responsible for daily operations at any wastewater treatment plant as defined above, and/or the owner of any wastewater treatment plant as defined above.

S. Sewer Line Chemical Root Control. A chemical root control agent designed specifically to control sewer line tree root intrusions shall be applied to sanitary sewers, according to the following specifications. The purpose of the application is to kill the root growth present in the lines and to inhibit root re-growth, without permanently damaging the vegetation producing the roots, and without disrupting wastewater treatment plant processes. The chemical agent shall be *RazoRooter II,* or *equivalent* products, approved by the Owner prior to the bid date.

The chemical product shall contain a herbicide to destroy root tissue, a herbicide to deter re-growth, and a foaming surfactant to deliver the herbicides to the target root growths. It shall be currently registered with the USEPA and the State Pesticide Regulatory Agency. It shall be labeled for use in sewers to control tree roots. The Contractor shall submit, with his bid, specimen product label(s) and Material Safety Data Sheets for any chemical root control agents that the Contractor proposes to use on the contract. The chemical shall be applied as foam to sewers in strict accordance with manner of application set forth in these specifications. The foam shall be pumped under sufficient pressure to assure that the entire sewer section is completely filled with foam, and to assure that the foam passes through lateral pipe connections to a distance of 10 to 15 feet up service lateral. The Contractor shall be responsible for insuring that the chemical root control treatments shall not have any adverse effects on wastewater treatment plants and/or receiving waters downstream from the applications. The contractor shall be required to take all necessary steps to prevent said adverse effects, at the Contractor's expense. The Contractor shall provide, in addition to other insurance's, ***Pollution and Chemical Liability Insurance****,* of the type specified herein.

The Pollution and Liability Insurance described herein is ***in addition to*** all other insurance required of the Contractor by the Owner, including any insurance described in the general conditions, any insurance required by law, or any other insurance requested by the Owner.

At the time* of *the bid opening*,* the Contractor shall submit written evidence that he and all his subcontractors have obtained pollution liability coverage. This coverage shall protect the Contractor, The Owner, and the owner's officers, agents and employees from claims for damages to property and/or the environment, which may arise directly out of the use of chemicals and/or

pollution. The minimum amount of such insurance shall be **$500,000.00 total loss**. This insurance shall be provided to the contractor by an insurance company that holds at least an "A" rating by A.M. Best rating service.

In addition, the contractor's commercial general liability limits must be not less than $1,000,000.00 total occurrence limit, and include pesticide or herbicide applicator coverage.

Furthermore, contractor shall have excess umbrella liability coverage in an amount not less than $1,000,000.00.

Contractor's Automobile liability insurance limits must be not less than $1,000,000.00.

The contractor shall provide the County with certificates evidencing the above-referenced insurance coverages. The insurance certificate(s) shall name the County as an additional insured on the general, automobile and excess liability insurance coverages.

Nothing contained in this section shall be construed as limiting the extent of the Contractor's responsibility for payment of damages resulting from his operations.

Only licensed, experienced contractors, who meet the standards set forth herein, shall be considered for award. The Job shall be supervised by a licensed Applicator, certified by the NYSDEC, and must meet the experience requirements set forth herein.

The Contractor shall guarantee all treatments in accordance with the terms of the guarantee as set forth herein.

The Contractor shall comply with all terms and conditions of these specifications. The submission of the Bid shall be considered as prima facie evidence that the Bidder has familiarized himself with and understands the conditions under which the Contract is to be awarded, performed, and administered. Bidders must satisfy themselves by personal examination of the location of the proposed work and by other such means as they desire as to actual conditions and requirements of the work. No letter, stipulation, or exception submitted with a bid shall modify the terms of the Contract. Bidders are cautioned not to attach any conditions, limitations, or provisions to the proposal as such conditions, limitations, or provisions will render their bid informal and cause its rejection.

The use of subcontractors shall not be permitted.

203-2 MATERIALS:

203-2.15 Chemical Root Control. The chemical root control agent shall be Razorooter™ II or equivalent product that is approved by the Owner in writing prior to the Bid Opening. The chemical root control agent shall be registered with the EPA and the New York State Department of Environmental Conservation, prior to the bid opening, and shall be labeled for use in sewers to control tree roots. The chemical Root control agent shall contain an active ingredient for controlling sewer roots and deterring their re-growth. There shall also be a surfactant system to deliver the active ingredient (herbicide) to the target root tissue.

Active ingredient:

1. Shall be a Category "E" compound, the most favorable rating attainable on the USEPA's chronic exposure toxicological rating scale.
2. Shall **not** be considered a carcinogen, teratogen, mutagen, or oncogene, based on laboratory testing.
3. Shall carry a "signal word" assigned by the USEPA of either "Warning" or "Caution," on the product label. **Pesticides carrying the signal word "Danger" shall not be accepted**.

4. Shall be non-volatile in order to minimize exposure to workers and other individuals by inhalation.
5. Shall not be readily absorbed through the skin.
6. Products containing the active ingredient(s) metam-sodium or copper sulfate are not allowed.

Surfactant system:

1. Shall produce a dense, small bubble, clinging foam, which sustains its shape for a minimum of one hour.
2. Shall enhance the penetration of herbicide into root masses.
3. Shall contain an Alkylpolyglucoside (formulations of vegetable oil and carbohydrate from agricultural products).
4. Surfactants designed to foam chemically, upon contact with water, shall not be accepted.

The chemical root control agent shall be registered with the USEPA and the NYSDEC, and shall be labeled for use in sewers to control tree roots. Only materials whose label instructions conform to these specifications shall be accepted. All applications must be in strict conformance with these specifications and label instructions. Use of any root control herbicide in a manner inconsistent with labeled instructions is a violation of Federal Law.

The active ingredient shall not adversely affect the performance of the wastewater treatment plant when applied properly in accordance with manufacturer's recommendations.

Compounds containing copper and/or other known priority pollutants, as defined by the USEPA shall be disallowed.

Use of any substitute *or equivalent* procedures, methods, or materials shall be approved by the Owner, in writing, prior to the bid date.

Should the Contractor wish to use any brand of material other than as specified herein, he shall submit to the Owner for review, complete descriptive literature naming the proposed substitution and manufacturer. The chemical formulation must have been in use as a sewer root control product that the proposed material has a proven record of performance when used for the intended application as confirmed by successful installations in place for a minimum of five (5) years.

203-3 CONSTRUCTION DETAILS:

203-3.08 Chemical Root Control. The contractor must demonstrate a minimum level of five (5) years direct experience in applying chemical sewer root control of the type specified herein. Such work experience must be direct, and the work must have been performed by the Contractor's own crews. The Contractor must have performed at least ten (10) other jobs of similar size and scope to the work specified herein, and have treated in excess of 500,000 linear feet of sanitary sewer. Any work performed by subcontractors for the Contract will not be considered direct contractor experience.

The contractor shall be liable to the Owner for all expenses, losses or damages, as determined by the Owner, incurred in consequence and any defect, omission or mistake of the Contractor, his subcontractors, agent, or employees, or for the making good thereof.

Should any chemical root agent spill on the ground, the chemical and affected soil shall be removed and safely disposed of. The area shall be restored to a condition equal to or better than

before the spill. Any damage to vegetation resulting from misuse of the chemical root control agent shall be the responsibility of the Contractor.

The Contractor shall be responsible for any and all damages to structures inside and out caused by chemical root control chemicals.

The Contractor shall be responsible for insuring that there are no adverse effects on wastewater treatment plant processes, or adverse effects on the quality of wastewater treatment plant effluent, as a result of chemical application.

The Contractor shall respect the rights of property owners, and not enter upon private property without obtaining permission from the owner of the property. Some line sections will be located in easements that may be difficult to access, and that requires the Contractor to enter private property. Special note to the Contractor: Some lines may be located in easements that are difficult to access.

The Contractor shall place proper traffic warning devices to protect the specific job site, and to prevent accidents or personal injury to the public. Police protection and/or flagmen for safe traffic control shall be provided by the Contractor as conditions dictate or when so directed by the Owner. Some line sections will be located in heavy traffic areas.

Filling of a chemical mixing tank shall be done with an air gap or reduced-pressure-zone backflow prevention device, approved by the Owner. The Contractor may only draw water from public water supplies at locations and using procedures approved by the Owner.

The Contractor shall keep complete, accurate records of each day's operation.

Records shall show date of treatment, sections of line treated, pipe size and distance, and other pertinent information. Logsheets shall be submitted with the invoice.

The Contractor shall return within 4 -8 months after the work is completed and periodically throughout the life of the guarantee, in order to evaluate the success of the project, and to arrange any free guarantee work that may arise.

The Contractor shall be responsible for insuring that handling, transportation, and use of any hazardous materials, and disposal of all pesticides containers, is according to the State and Federal regulations pertaining thereto.

Contractors must be licensed as pesticide application businesses with the State pesticide Regulatory Agency ***prior* to *the bid opening***. Bids from contractors who intend to obtain the necessary pesticide application licenses after the bid opening shall be considered unresponsive. Contractors who do not meet the experience and other qualifications specified herein shall not be considered for award of the contract. Each bidder is required to submit with his bid the contractor qualification form attached to these specifications.

All work must be supervised by someone who is licensed as a Certified Pesticide Applicator with the NYSDEC. Certified Pesticide Applicators shall have a minimum three years experience in performing the type of work specified, and shall each have personally performed a minimum of 300,000 linear feet of treatments as a Certified Pesticide Applicator and/or under the direct supervision of a Certified Pesticide Applicator.

Where sewer cleaning, grouting, or relining is specified, or required, the foaming root control shall be performed a minimum of 60 days in advance of those operations, to maximize the biological decay of the root masses.

Application of the chemical root control agent shall be foaming in accordance with the best recommended practice for conditions present in the line under treatment. All foaming shall be in strict accordance with the instructions on the container label.

A foam discharge hose shall be in inserted throughout the entire length of the sewer section to be treated. The equipment used shall discharge foam at approximately 30 PSI, so as to force foam up connecting lateral sewers approximately 10-15 feet. Hose retrieval rates must be timed to *evenly* distribute the full quantity of foam throughout the entire area of treatment. The quantity of foam --see chart below as guide on smaller diameter pipe --shall be sufficient to

completely fill the entire *volume* of the main sewer treated, plus an additional 10% to allow for the penetration of material up lateral sewers, and for loss in manholes. Sewer service to homeowners shall not be interrupted. The Contractor must beware that excessive discharge pressure and/or *excessive* quantities of material may cause foam to enter houses, or travel up forward clean-outs onto lawns.

Gallons of Concentrate	Gallons of Solution	Gallons of Foam	4-inch	6-inch	8-inch	10-inch	12-inch	15-inch
5	100	2000	2750 ft.	1250 ft.	750 ft.	500 ft.	350 ft.	200 ft.
10	200	4000	5500 ft.	2500 ft.	1500 ft.	1000 ft.	700 ft.	450 ft.
15	300	6000	8250 ft.	3750 ft.	2250 ft.	1500 ft.	1050 ft.	650 ft.

Materials that are labeled to be poured down manholes or sprayed on to roots shall not be accepted.

In addition, the machine shall be so designed that the drum is capable of cutting with zero side clearances on at least one side. The reclaimed material will be discharged to the rear of the machine. The equipment shall be capable of accurately and automatically

The Contractor shall take all steps necessary and appropriate to prevent adverse effects on wastewater treatment plant processes.

The Contractor attests, through submittal of a bid or proposal, or through agreeing to the contract, that the Contractor is expert in this type of work, and recognizes and understands the risks posed by this type of work on wastewater treatment plant processes. The Contractor shall not rely on the Owner for guidance in this regard.

Introduction of any materials in any wastewater treatment plant must be with the approval of the wastewater treatment plant operator for that plant.

The contractor shall notify the Wastewater Treatment Plant Operator of any wastewater treatment plant that may be effected by the Contractor's performance of the Contract, of the date and time of all intended work, and provide the Operator with data or “other information requested by the Operator, including specimen product labels and Material Safety Data Sheets, for any materials introduced to the collection.

The Contractor shall provide the Wastewater Treatment Plant Operator with names and phone numbers of individuals in a position to notify the Contractor's crew of the need to immediately stop work, including the names and phone numbers of the Owner, the Contractor, and the hotel or other local phone number of the Contractor's on-site supervisor. The Contractor shall maintain daily communications with the Wastewater Treatment Plant Operator to assure that the chemical root control treatments are not having any adverse effects on wastewater treatment plant processes. In the event that a wastewater treatment plant experiences any reduction in operating efficiency during the execution of the contract, whether the result of the chemical treatments or not, the Contractor shall immediately suspend all applications, and notify the Owner. The contractor shall continue operations only after problems at the wastewater treatment plant have been corrected, and the contractor has taken appropriate steps, satisfactory to the Owner and the wastewater plant operator. To prevent recurrence of any problems at the wastewater treatment plant that may be the result of chemical applications.

The Contractor shall be financially responsible for any adverse effects on wastewater treatment plant processes which are, directly or indirectly, caused by the chemical application, including but not limited to the following: damages to plant processes or equipment, clean-up and restoration costs, fines imposed on the Owner or on the Operator of the wastewater treatment plant by State or Federal agencies, pollution of receiving waters, and civil suits. The contractor

shall further indemnify and hold harmless the Owner, and the Operator of the wastewater treatment plant, against all costs, including legal expenses, relating to treatment plant failure or other damages or pollution caused directly or indirectly by the applications of chemicals by the Contractor.

In the event that the Owner desires to have work performed by the Contractor during the contract period the Owner shall issue a purchase order to the Contractor. The Owner may issue more than one purchase order per contract period.

Upon receipt of a purchase order, the Contractor shall start work within thirty calendar days, and complete all work in a timely fashion to the satisfaction of the Owner. Failure of the Contractor to respond to purchase orders and complete work in a timely fashion to the satisfaction of the Owner will result in cancellation of the contract.

The Contractor shall provide 48-hour notice to the Owner prior to starting work on any portion of the contract. All work shall be performed during normal business hours on any portion of the contract. All work shall be performed during normal business hours observed by the Owner. Work during other hours, weekends, or holidays observed by the Owner, may only be performed with permission from the Owner. The Owner reserves the right to inspect all work as it is performed and to reject any work that in the opinion of the Owner is defective in workmanship and materials. In the event that the work schedule proposed by the Contractor places the Owner at an inconvenience with respect to the inspection of the work, the Owner may require the Contractor to halt or delay the work, reduce the number of crews on the job, or take any other steps deemed necessary by the Owner to enable the Owner to exercise the right to inspect.

203-4 METHOD OF MEASUREMENT:

203-4.15 Chemical Root Control. The quantity to be measured shall be the number of linear feet of pipe treated.

203-5 BASIS OF PAYMENT:

203-5.15 Chemical Root Control. The unit price bid per linear foot for this work shall include the cost of mobilization and furnishing all labor, materials and equipment necessary to satisfactorily complete the work. Payment will be made for only those facilities designated by the Owner to be treated.

Payment will be made under:

Item No.	Item	Pay Unit
203.0801	Select Granular Fill, Slope Protection-Type A	Cubic Yard
203.0802	Select Granular Fill, Slope Protection-Type B	Cubic Yard
E203.9908	Sewer Line Chemical Root Control, 8-in. dia.	Linear Foot
E203.9910	Sewer Line Chemical Root Control, 10-in. dia.	Linear Foot
E203.9912	Sewer Line Chemical Root Control, 12-in. dia.	Linear Foot
E203.9915	Sewer Line Chemical Root Control, 15-in. dia.	Linear Foot
E203.9918	Sewer Line Chemical Root Control, 18-in. dia.	Linear Foot
E203.9921	Sewer Line Chemical Root Control, 21-in. dia.	Linear Foot
E203.9924	Sewer Line Chemical Root Control, 24-in. dia.	Linear Foot

SECTION E204 – FLOWABLE FILL

Section 204 of the NYSDOT Standard Specifications dated May 1, 2008, and all addenda shall apply except as modified herein.

204-5 BASIS OF PAYMENT:

204-5.01 General. The unit price bid shall include delivery within eight (8) miles of the supplier's plant. Payment will be made for mileage in excess of eight (8) miles per delivery regardless of unit quantity.

Payment will be made under:

Item No.	Item	Pay Unit
E204.01	Controlled Low Strength Material (CLSM)	Cubic Yard
E204.01A	CLSM Extra Mileage	Per Mile
E204.01B	CLSM Waiting Time	Per Minute
E204.01C	CLSM Heating Materials	Per CY
E204.01D	CLSM Extra Charge for Loads Under 20 CY	Per Load

SECTION 206 – TRENCH, CULVERT, STRUCTURE EXCAVATION

Section 206 of the NYSDOT Standard Specifications dated May 1, 2008, and all addenda shall apply.

Payment will be made under:

Item No.	Item	Pay Unit
206.01	Structure Excavation	Cubic Yard
206.0201	Trench & Culvert Excavation	Cubic Yard
206.05	Test Pit Excavation	Each

SECTION 207 – GEOSYNTHETICS

Section 207 of the NYSDOT Standard Specifications dated May 1, 2008, and all addenda shall apply.

Payment will be made under:

Item No.	Item	Pay Unit
207.20	Geotextile Bedding	Square Yard
207.21	Geotextile Separation	Square Yard
207.22	Geotextile Drainage	Square Yard
207.23	Geotextile Slope Protection	Square Yard
207.24	Geotextile Stabilization	Square Yard

SECTION E209 – SOIL EROSION AND SEDIMENT CONTROL

Section 209 of the NYSDOT Standard Specifications dated May 1, 2008, and all addenda shall apply except as modified herein.

209-5 BASIS OF PAYMENT:

209-5.01 General. The unit price bid shall include the cost of furnishing materials and delivery of a 100 foot roll.

Payment will be made under:

Item No.	**Item**	**Pay Unit**
E209.13	Silt Fence – Temporary	Each

SECTION 210 – REMOVAL AND DISPOSAL OF ASBESTOS CONTAINING MATERIAL – ACM (BUILDINGS, BRIDGES AND HIGHWAYS)

Section 210 of the NYSDOT Standard Specifications dated May 1, 2008, and all addenda shall apply.

Payment will be made under:

Item No.	Item	Pay Unit
210.3001	Removal and Disposal of Concrete-Encased Pipe ACM	Foot
210.3101	Removal and Disposal of Underground Pipe ACM	Foot

SECTION E302 – BITUMINOUS STABILIZED COURSE

Section 302 of the NYSDOT Standard Specifications dated May 1, 2008, and all addenda shall apply except as modified herein.

302-5 BASIS OF PAYMENT. The unit price bid per cubic yard of Bituminous Stabilized Course shall include the cost of furnishing all labor, materials and equipment, including bituminous material and water necessary to complete the work.

The unit price for furnishing bituminous material, pugmill, all labor and equipment necessary to incorporate the bituminous material in the work and to stockpile the finished product. Aggregate supplied by Erie County.

The unit price for furnishing bituminous material, pugmill and labor necessary to incorporate the bituminous material in the work. Aggregate and equipment for charging mixer and stockpiling finished product to be supplied by Erie County.

Any work by the Contractor required for the maintenance or repair of bituminous stabilized course prior to acceptance of the contract, shall be done at the Contractor's expense.

Payment will be made under:

Item No.	**Item**	**Pay Unit**
302.01	Bituminous Stabilized Course	Cubic Yard
302.0101	Bituminous Stabilized Course - EC supplies Aggregate	Cubic Yard
302.0102	Bituminous Stabilized Course - EC supplies Aggregate and Equipment	Cubic Yard

SECTION 304 – SUBBASE COURSE

Section 304 of the NYSDOT Standard Specifications dated May 1, 2008, and all addenda shall apply.

Payment will be made under:

Item No.	Item	Pay Unit
304.12	Subbase Course, Type 2	Cubic Yards

SECTION E402 – HOT MIX ASPHALT (HMA) PAVEMENTS

Section 402 of the NYSDOT Standard Specifications dated May 1, 2008, and all addenda shall apply except as modified herein.

The requirements of Section 401 - Plant Production and Section 402 - Hot mix Asphalt (HMA)

Pavements shall apply except as modified below.

1.0 DESCRIPTION

This work shall consist of developing Polymer-Modified HMA mixture using the Superpave Mix Design procedure detailed in Materials Method 5.16, “Superpave Hot Mix Asphalt Mixture Design and Mixture Verification Procedures,” except as modified in these specifications. Polymer-Modified HMA is a mixture of Performance-Graded Binder (PG Binder), mineral aggregate, and mineral filler, if required. Polymer-Modified HMA pavement course shall be constructed in accordance with these specifications and in reasonably close conformity with the required lines, grades, thicknesses, and typical sections shown on the plans or established by the Engineer. This is a performance-based specification in which the Contractor is responsible for compacting the pavement to a specified density requirement. Written instructions for determining pavement density are available from the Regional Materials Engineer or the Director, Materials Bureau. All necessary pavement repairs, crack sealing, joint sealing, pavement marking removal, utility grade adjustments, and milling of rebates will be paid under appropriate items.

2.0 MATERIALS

A. Polymer-Modified Mixture

The materials and composition for Polymer-Modified mixtures shall meet the requirements specified in §401-2 Materials, except as noted herein.

Produce Polymer-Modified HMA in accordance with the procedures outlined in this specification and NYSDOT’s Material Method 5.16, Superpave Hot Mix Asphalt Mixture Design and Mixture

Verification Procedures except as modified below:

Formulate and submit to the Regional Materials Engineer a Polymer-Modified HMA design, which satisfies design criteria outlined in this specification. The minimum PG Binder content shall not be less than 6.0%.

Table 1 – 6.3 mm Polymer-Modified HMA Design Control Points

Standard Sieves (mm)	Percent Passing Criteria	
	Maximum	Minimum
9.5		100
6.30	100	90
4.75	90	
2.36	70	37
0.075	10	2

Table 2 – 6.3 mm Polymer-Modified HMA Mixture Additional Aggregate Criteria

Coarse Aggregate Angularity (Percent), minimum	Uncompacted Void Content of Fine Aggregate (Percent), minimum	Flat-and-elongated Particles (Percent), maximum	Sand Equivalent (Percent), minimum
95/90	43	10	45

Table 3 – 6.3 mm Polymer-Modified HMA Volumetric Design Criteria

% Gmm @ Ninitial	% Voids Filled with Binder		% Voids in the Mineral Aggregate, minimum
	Minimum	Maximum	
< 90.5	70	78	16

Table 4 – 6.3 mm Polymer-Modified HMA Design Number of Gyrations

Compactive Effort	Ninitial	Ndesign	Nmaximum
Number of Gyrations	7	75	115

Table 5 – 6.3 mm Polymer-Modified HMA Production Gradation Tolerances

Sieve Size (mm)	9.5	6.3	4.75	2.36	1.18	0.600	0.300	0.150	0.075
Tolerance	± 4	± 4	± 3	± 3	± 3	± 2	± 2	± 2	± 2

1. Coarse Aggregate Type F1 Conditions

1. Limestone, dolomite, or a blend of the two having an acid insoluble residue content of not less than 20%.

2. Sandstone, granite, chert, traprock, ore tailings, slag, or other similar noncarbonate materials.

3. Use gravel or blend two or more of: gravel, limestone, dolomite, sandstone, granite, chert, traprock, ore tailings, or other similar materials to produce a final blend of which the noncarbonate plus 2.36 mm material comprises at least 30% of the total aggregate. In addition, at least 95% of the plus 4.75 material must be noncarbonate.

2. Coarse Aggregate Type F2 Conditions

1. Limestone, dolomite, or a blend of the two having an acid insoluble residue content of not less than 20%.

2. Sandstone, granite, chert, traprock, ore tailings, slag, or other similar noncarbonate materials.

3. Use gravel or blend two or more of: gravel, limestone, dolomite, sandstone, granite, chert, traprock, ore tailings, or other similar materials to produce a final blend of which the noncarbonate plus 2.36 mm material comprises at least 10% of the total aggregate. In addition, at least 20% of the plus 4.75 material must be noncarbonate.

3. Coarse Aggregate Type F3 Conditions

1. Limestone or a blend of limestone and dolomite having an acid insoluble residue content of not less than 20%.

2. Dolomite.

3. Sandstone, granite, chert, traprock, ore tailings, slag, or other similar noncarbonate materials.

4. Use gravel or blend two or more of: gravel, limestone, dolomite, sandstone, granite, chert, traprock, ore tailings, or other similar materials to produce a final

blend of which the noncarbonate plus 2.36 mm material comprises at least 10% of the total aggregate. In addition, at least 20% of the plus 4.75 material must be noncarbonated.

PG Binder. Use the appropriate Performance-Graded Binder (PG Binder), as listed in Table 6

below, in the production of these mixtures that meets the AASHTO M 320 – Standard Specification for Performance-Graded Asphalt Binder.

Table 6 - PG Binder

Location	PG Binder[1]
Downstate[2]	Polymer-Modified PG 76-22
Upstate[3]	PG 64V-22 with an minimum of 60% Elastic Recovery[4]

NOTES:

1. Use of all other PG Binder grades allowed only by approval of the Director of the Materials Bureau. If allowed, use Table 401-7, Delivery Ticket Mix Coding, of the Standard Specifications to properly identify the PG Binder grade on the delivery ticket.

2. “Downstate” is defined as the counties of Orange, Rockland, Putnam, Westchester, Nassau, Suffolk, and the City of New York.

3. “Upstate” is defined as all other counties except as noted in Note 1.

4. Elastic Recovery, AASHTO T301-95, 100 mm elongation and cut immediately at 25°C.

3.0 CONSTRUCTION DETAILS

The provisions of §401-3 and §402-3, Construction Details, shall apply.

4.0 METHOD OF MEASUREMENT

A. Polymer-Modified Mixture

The provisions of §401-4 and §402-4, Method of Measurement, shall apply except as modified herein.

Table 9 Delivery Ticket Mix Coding[2]								
Mix Type	**Code**	**Code[1]**	**Design ESAL**	**Code**	**Consensus Properties**	**Code**	**PG Binder Type**	**Code**
6.3 mm	06	F1	**<3.0 million**	2	**<100 mm**	Y	**PG 64V-22**	C
----	**----**	F2	**----**	**----**	**----**	**----**	**PG 76-22**	E
----	**----**	F3	**----**	**----**	**----**	**----**	**----**	**----**

Notes:

1. Friction Aggregate Classification Codes

2. Delivery Ticket Mix Coding Example: 6.3 mm, Type F2 friction requirements, PG 64V-22 with a minimum of 60% Elastic Recovery - Mix Coding on Delivery Ticket: ***06F22YC***.

5.0 BASIS OF PAYMENT

A. Polymer-Modified Mixture

The provisions of subsection 402-5 Basis of Payment shall apply.

Performance Graded (PG) Binder and Mix Design Level

Superpave Hot Mix Asphalt (HMA), 9.5, 19.0, 25 and 37.5 – Nominal maximum Size Requirements of this note apply to all Section 402 Hot Mix Asphalt (HMA) items under this contract.

PG Binder

Use a polymer modified Performance Graded (PG) Binder PG 64V-22 during the production of Superpave Hot Mix Asphalt (HMA) mixtures for this project. The PG Binder shall meet the requirements of AASHTO M320, Standard Specifications for Performance Graded Asphalt Binder and **Elastic Recovery** requirements as shown in the table below:

Test of the rolling thin oven (RFTO) Binder Sample

Test	Requirements
Elastic Recovery using ASTM D6084-04, Testing Procedure A, at 25 degrees C	60% minimum

Use of polyphosphoric acid (PPA) to modify the PG binder properties is prohibited. This prohibition also applies to the use of PPA as a cross-linking agent for polymer modifications.

Mix Design

The mixture designs must be developed in accordance with the criteria specified in the Superpave HMA items that are appropriate for an "**Estimated Traffic" level of greater than 0.3 bus less than 30.0 "Million 80 kN ESALs.** Under no circumstances shall the PG Binder content in the HMA be less than 5.8% for a 9.5 design, 5.2% for a 12.5 design, 4.5% for a 19.0 design, 4.2% for a 25.0 design or 3.7% for a 37.5 design.

Caution: The PG binder for this project will likely be modified using polymer additives to meet the requirements stated above. Handling of the HMA shall be discussed at the preconstruction meeting.

The Contractor should be aware that this is a performance-related specification in which the Contractor is responsible for compaction of the pavement within a specified density range. The Contractor must be prepared to select, operate, and control the paving and compaction equipment, to monitor the results, and to make necessary adjustments (without direction from the Engineer) to achieve the specified density results.

402-5 BASIS OF PAYMENT. The unit price bid for the following pavement courses shall include the cost of all material, labor and equipment necessary to complete the work, including obtaining the pavement cores, filling and compaction of all core holes (402.06820218, 402.097202, E402.09720202, 402.097302, E402.09730202, 402.127202, E402.12720202, 402.127302, 402.197902 and 402.257902).

The unit bid price for the following pavement courses shall include the cost of material and price per ton (E402.06820218, E402.09720201, E402.09720203, E402.09730201, E402.09730203, E402.12720201, E402.12720203, E402.12730201, E402.19790201 and E402.25790201).

Payment will be made under:

Item Number	Item	Pay Unit
402.06820218	6.3 F2 Polymer Modified HMA, 80 Series Compaction	Ton
E402.06820218	6.3 F2 polymer-Modified HMA, 80 Series Compaction F.O.B. plant price per ton	Ton
402.097202	9.5 F2 Top Course HMA, 70 Series Compaction	Ton
E402.09720201	9.5 F2 Top Course HMA, 70 Series Compaction F.O.B. plant price per ton	Ton
E402.09720202	9.5 F2 Polymer-Modified HMA, 70 Series Compaction	Ton
E402.09720203	9.5 F2 Polymer-Modified HMA, 70 Series Compaction F.O.B. plant price per ton	Ton
402.097302	9.5 F3 Top Course HMA, 70 Series Compaction	Ton
E402.09730201	9.5 F3 Top Course HMA, 70 Series Compaction F.O.B. plant price per ton	Ton
E402.09730202	9.5 F3 Polymer-Modified HMA, 70 Series Compaction	Ton
E402.09730203	9.5 F3 Polymer-Modified HMA, 70 Series Compaction F.O.B. plant price per ton	Ton

SECTION E402 – HOT MIX ASPHALT (HMA) PAVEMENTS

Item Number	Item	Pay Unit
402.127202	12.5 F2 Top Course HMA, 70 Series Compaction	Ton
E402.12720201	12.5 F2 Top Course HMA, 70 Series Compaction F.O.B. plant price per ton	Ton
E402.12720202	12.5 F2 Polymer-Modified HMA, 70 Series Compaction	Ton
E402.12720203	12.5 F2 Polymer-Modified HMA, 70 Series Compaction F.O.B. plant price per ton	Ton
402.127302	12.5 F3 Top Course HMA, 70 Series Compaction	Ton
E402.12730201	12.5 F3 Top Course HMA, 70 Series Compaction F.O.B. plant price per ton	Ton
402.197902	19 F9 Binder Course HMA, 70 Series Compaction	Ton
E402.19790201	19 F9 Binder Course HMA, 70 Series Compaction F.O.B. plant price per ton	Ton
402.257902	25 F9 Binder Course HMA, 70 Series Compaction	Ton
E402.25790201	25 F9 Binder Course HMA, 70 Series Compaction F.O.B. plant price per ton	Ton

SECTION E403 – HOT MIX ASPHALT PAVEMENT FOR MUNICIPALITIES

403-1 DESCRIPTION. These general specifications apply to plant mixed Hot Mix Asphalt (HMA) for use by municipalities such as Towns, Counties, etc. Modifications of these general requirements will be indicated in the specific requirements for each item. These mixes are suitable for low to moderate traffic volumes.

This work will consist of one or more courses of HMA constructed on the prepared foundation in accordance with these specifications and the specific requirements of the item under contract, and in reasonably close conformance with the lines, grades, thickness and typical sections shown on the plans or established by the Engineer.

Appropriate mix types with corresponding friction aggregates and Performance Graded Binder (PG Binder) grades must be specified and used based on the traffic levels and the project location. When the traffic levels exceed an AADT of 8,000 for two lanes or 13,000 for three or more lanes, then Items in Section 402 must be specified.

403-2 MATERIALS

403-2.01 General. Use all materials for HMA production such as aggregates, PG Binder, Reclaimed Asphalt Pavement (RAP), mineral filler or any other materials meeting the State's requirements.

403-2.02 Composition of Mixtures. The HMA plant mix will generally be composed of a mixture of aggregate, Reclaimed Asphalt Pavement (RAP), filler if required, and PG Binder. For any HMA required by the plans or itemized proposal, formulate a job mix formula that satisfies the General Limits imposed by Table 403-1, Composition of Hot Mix Asphalt Mixtures. In addition, the formula will state the mineral aggregate sources, and the PG Binder used in the mixture. For Type 6F2, 6F3, 7F2, and 7F3 mixtures, determine the optimum asphalt content for the proposed gradation using the Marshall Mix Design Method (50 blows).

The resultant mixture shall meet the following Marshall Mix Properties:

Mix Property	**Type 6F2, 6F3**	**Type 7F2, 7F3**
Air Voids, %	3.0 - 5.0	3.0 - 5.0
Voids in Mineral Agg. (VMA), %, min.	14	16
Voids Filled with Binder (VFB), %	65 - 78	65 – 78

Produce, deliver to the work site, and incorporate the mixture into the work within 20°F of the temperature specified by the Engineer but within the mixing and placing temperature range imposed by Table 403-1, Composition of Marshall Designed Plant Mixtures.

The aggregates will be those noted in the job mix formulas. The PG Binder will be accepted on the basis of PG Binder supplier's certification.

Perform quality control tests during HMA production to ensure specification compliance. The plant mixed material will be accepted after blending and mixing at the plant. The pavement courses will be accepted after all paving operations are completed.

403-2.03 Aggregates. Fine aggregate will consist of materials conforming to the requirements of §703-01, Fine Aggregate. In addition, fine aggregate may consist of screenings, free from deleterious materials and manufactured from sources of stone, gravel, or slag meeting the requirements §703-02, Coarse Aggregate. Coarse aggregate will consist of crushed stone, crushed gravel, or crushed slag conforming to the requirements of §703-02, except for gradation.

When aggregates from approved natural fine sand sources are combined with coarse aggregates in the mixture, aggregate particles will meet additional requirements as follows:

- Particles in the No. 1A and No. 1 primary sizes will meet the quality requirements of

§703-02 and will have a minimum of 85 percent, by weight, of the particles with at least two fractured faces.

- Particles in the No. 2, No. 3 and No. 3A primary sizes will meet the quality requirements of §703-02 and will have a minimum of 75 percent, by weight, of the particles with at least one fractured face.

Slag aggregate may be used only when an alternate pay item which takes the mix yield differential into account is included on the plans or in the itemized proposal.

Aggregates for all mixtures specified in Table 403-1, including Type 6 or 7 (F9), shall meet the requirements of §703-02, Coarse Aggregate. In addition, the aggregate requirements for Type 6F2, 6F3, 7F2, and 7F3 mixtures shall meet one of the following requirements based on the mix type specified in the contract documents:

A. Coarse Aggregate Type F2 Conditions

1. Limestone, dolomite, or a blend of the two having an acid-insoluble residue content of not less than 20.0%.
2. Sandstone, granite, chert, traprock, ore tailings, slag or other similar non-carbonate materials.
3. Gravel, or a natural or manufactured blend of the following types of materials: limestone, dolomite, gravel, sandstone, granite, chert, traprock, ore tailings, slag or other similar materials, meeting the following requirements:
   a. Type 6F2 Mixes. Non-carbonate plus 1/8 inch particles must comprise a minimum of 10.0% of the total aggregate (by weight with adjustments to equivalent volumes for materials of different specific gravities). Additionally, a minimum of 20.0% of plus 1/4 inch particles must be noncarbonate.
   b. Type 7F2 Mixes. Non-carbonate plus 1/8 inch particles must comprise a minimum of 10.0% of the total aggregate (by weight with adjustments to equivalent volumes for materials of different specific gravities). Additionally, a minimum of 20.0% of plus 1/8 inch particles must be noncarbonate.

TABLE 403-1 COMPOSITION OF HOT MIX ASPHALT MIXTURES

Mixture	Base				Binder		Shim		Top[3,4]			
Require-ments[1]	Type 1		Type 2		Type 3		Type 5		Type 6, 6F2, 6F3		Type 7, 7F2, 7F3	
Screen Sizes	General limits % Passing	Job Mix Tol. %	General limits % Passing	Job Mix Tol. %	General limits % Passing	Job Mix Tol. %	General limits % Passing	Job Mix Tol. %	General limits % Passing	Job Mix Tol. %	General limits % Passing	Job Mix Tol. %
2 in.	100	-	100	-	-	-	-	-	-	-	-	-
1 ½ in.	90-100	-	75-100	±7	100	-	-	-	-	-	-	-
1 in.	78-95	±5	55-80	±8	95-100	-	-	-	100	-	-	-
½ in.	57-84	±6	23-42	±7	70-90	±6	-	-	95-100	-	100	-
¼ in.	40-72	±7	5-20	±6	48-74	±7	100	-	65-85	±7	90-100	-
1/8 in.	26-57	±7	2-15	±4	32-62	±7	80-100	±6	36-65	±7	45-70	±6
No. 20	12-36	±7	-	-	15-39	±7	32-72	±7	15-39	±7	15-40	±7
No. 40	8-25	±7	-	-	8-27	±7	18-52	±7	8-27	±7	8-27	±7
No. 80	4-16	±4	-	-	4-16	±4	7-26	±4	4-16	±4	4-16	±4
No. 200	2-8	±2	-	-	2-8	±2	2-12	±2	2-6	±2	2-6	±2
PGB Content %[2]	4.0-6.0	0.4	2.5-4.5	0.4	4.5-6.5	0.4	7.0-9.5	0.4	5.4-7.0	NA	5.7-8.0	NA
Mixing &[5]	250-325		225-300		250-325		250-325		250-325		250-325	

Mixture	Base				Binder		Shim		Top[3,4]			
Require-ments[1]	Type 1		Type 2		Type 3		Type 5		Type 6, 6F2, 6F3		Type 7, 7F2, 7F3	
Screen Sizes	General limits % Passing	Job Mix Tol. %	General limits % Passing	Job Mix Tol. %	General limits % Passing	Job Mix Tol. %	General limits % Passing	Job Mix Tol. %	General limits % Passing	Job Mix Tol. %	General limits % Passing	Job Mix Tol. %
Placing Temp. Range, deg. F												
Description and Typical Uses	Dense Base: For general use		Open Base: For permeable base layer		Dense Binder: Intermediate layer for general use		Shim: Fine HMA mixture for shimming ruts and leveling		Top Course: Dense course for single course resurfacing of rural, suburban, and urban roadways			

NOTES:
1. All aggregate percentages are based on the total weight of the aggregate.
2. The asphalt content is based on the total weight of the mix. When using slag aggregates in the mix, increase the PGB content accordingly, a minimum of 25 percent for an all slag mix.
3. 6F2, 6F3, 7F2, 7F3 mix types require friction coarse aggregates and are required for mainline driving surface courses.
4 For Type 6 and Type 7 (F9) aggregate requirements, Marshall design will not be required. These mix types are suitable where the State's requirements for F9 aggregate apply.
5. Introduce the PG Binder into the pugmill between 225°F and 350°F, or as recommended by the PG Binder supplier.

B. Coarse Aggregate Type F3 Conditions

1. Limestone or a blend of limestone and dolomite having an acid-insoluble residue content of not less than 20.0%.
2. Dolomite
3. Sandstone, granite, chert, traprock, ore tailings, slag or other similar non-carbonate materials.
4. Gravel, or a natural or manufactured blend of the following types of materials: limestone, dolomite, gravel, sandstone, granite, chert, traprock, ore tailings, slag or other similar materials, meeting the following requirements:
   a. Type 6F3 Mixes. Non-carbonate plus 1/8 inch particles must comprise a minimum of 10.0% of the total aggregate (by weight with adjustments to equivalent volumes for materials of different specific gravities). Additionally, a minimum of 20.0% of plus 1/4 inch particles must be noncarbonate.
   b. Type 7F3 Mixes. Non-carbonate plus 1/8 inch particles must comprise a minimum of 10.0% of the total aggregate (by weight with adjustments to equivalent volumes for materials of different specific gravities). Additionally, a minimum of 20.0% of plus 1/8 inch particles must be noncarbonate.

When coarse aggregates for these mixes are from more than one source or of more than one type of material, proportion and blend them to provide a uniform mixture.

403-2.04 Mineral Filler. Mineral filler, if required in the mix to meet gradation requirements, will conform to the requirements of §703-08, Mineral Filler.

403-2.05 Performance-Graded Binder. The PG Binder will meet the requirements of §401-2.04, Performance Graded Binder. Unless the type of PG Binder is specified in the Contract Documents, use PG64-22, or a PG Binder specified in Table 6-4, Performance Graded Binder Selection, of Chapter 6 of the Comprehensive Pavement Design Manual, or other suitable PG Grade as approved by the Engineer.

403-2.06 Reclaimed Asphalt Pavement. Reclaimed Asphalt Pavement (RAP) will meet the requirements as written in Materials Method (MM) 5.16, Superpave Hot Mix Asphalt Mixture Design and Mixture Verification Procedures.

403-3 CONSTRUCTION DETAILS. The contractor is responsible for Quality Control (QC). QC is defined as all activities required to produce HMA that meets all specification requirements. The Contractor will produce HMA in accordance with the State approved Control Plan and assume responsibilities for all QC activities at the production facilities. If specified in the contract documents, The Quality Control provisions of Section 401 shall apply.

Unless modified in the contract document, the details of §401-3, Construction Details, will apply except for the gyratory compactor, specimen mold assembly, and the extractor of §401-3.08 HMA Mixing Plant are not required. In addition, the oven's capacity will be a minimum of 1 1/2 cubic feet. The HMA mixing plant inspection facilities shall include mixture design equipment for Marshall method as detailed below.

The details of §402-3 Construction Details will apply except for §402-3.05 Conditioning of Existing Surface and §402-3.07 Compaction, and §402-3.08 Pavement Density Samples. The requirements for conditioning of the existing surface and compaction are detailed below.

403-3.01 Equipment for Marshall Design Method

A. Marshall Compactor. A compactor will meet the requirements of AASHTO T245. Mount the compactor on a solid base. The compactor will be automatically driven, have a stroke counter, and be capable of automatically stopping after applying the desired number of strokes. The compaction hammer shall weigh 10 pounds (±0.02 pounds).

B. Marshall Specimen Mold Assembly. The specimen mold assembly will meet the requirements of AASHTO T245. The assembly shall consist of a compaction mold, base plate, and collar. Provide a minimum of three specimen mold assemblies and an adequate supply of 4 inch paper discs.

C. Marshall Specimen Extractor. Supply an extractor, meeting the requirements of AASHTO T245, to extract the 4 inches Marshall specimens from the compaction molds.

D. Hot Plate. Supply a hot plate suitable for heating the Marshall compaction hammer. A hot plate meeting the requirements of §401-3.08, 13. p. Sample Drying Appliance, will be acceptable.

403-3.02 Conditioning of Existing Surface. Clean the surface of the existing pavement prior to placing any HMA. When specified in the contract documents:

- Clean and fill the joints and cracks under the provisions of Section 633, Conditioning Existing Pavement.
- Apply a thin, uniform tack coat under the provisions of Section 407, Tack Coat, to all contact surfaces of existing HMA and Portland Cement Concrete layers including such areas as adjacent pavement edges, curbing, gutters, manholes and other structures, immediately prior to placing the HMA mixture against them.

- If the pavement surface is rutted, fill all depressions and wheel path ruts prior to the paving of the truing and leveling course, as directed by the Engineer. For wheel path ruts 1/4 inch or greater, but 3/4 inch or less, use Shim Course. Otherwise, for ruts greater than 3/4 inch, use a Type 7 mixture or other appropriate mixture.
- Place a truing and leveling course of a minimum variable thickness of proper plant mix necessary to bring the surface of the existing pavement to the same transverse slope and longitudinal grade required for the finished pavement surface. For compacted thickness up to 2 inches, use a Type 6 or Type 7 mixture. For compacted thickness in excess of 2 inches, use a Type 3 mixture. Pay special attention to the proper compaction of thin sections.

403-3.03 Compaction. Immediately after the HMA mixture has been spread, struck off and surface irregularities adjusted, thoroughly and uniformly compact it by rolling. Roll the surface when the mixture is in the proper condition and when the rolling does not cause undue displacement, cracking or shoving. Initially roll all courses with the roller traveling parallel to the centerline of the pavement beginning at each edge and working toward the center. Roll the banked curves starting at the low side edge and working toward the super-elevated edge.

Correct at once any displacement occurring as a result of reversing the direction of the roller, or from other causes, by the use of rakes and addition of fresh mixture as required. Exercise care in rolling so as not to displace the line and grade of the edges of the HMA mixture. To prevent adhesion of the mixture to the drum(s) and pneumatic tires, keep the drum(s) and the pneumatic tires properly moistened with water or water mixed with small quantities of detergent or other approved material. Any petroleum products or solvents having an adverse effect upon the HMA pavement will not be permitted for use.

There shall be no visible defects, such as shallow ruts, ridges, roller marks, cracking, tearing, segregation, or any other irregularities as determined by the Engineer, in the pavement when the rolling operation is complete. If these defects are present, correct these defects to the satisfaction of the Engineer or relay the pavement at no additional cost.

Along forms, curbs, headers, walls and other areas not accessible to the rollers, thoroughly compact the mixture with mechanical tampers as directed by the Engineer. On depressed areas, use a trench roller or a small vibratory roller with the approval by the Engineer. Cleated compression strips also may be used under the roller to transmit compression to the depressed area.

Remove and replace any mixture that becomes loose and broken, mixed with dirt, or is in any way defective with fresh HMA mixture which shall be compacted to conform with the surrounding area. Correct any area showing an excess or deficiency of HMA material to the satisfaction of the Engineer.

When using vibratory compaction, assume full responsibility for the cost of repairing all damages which may occur to the highway components and adjacent property including buried utility and service facilities.

Use either of the two compaction options listed below except that the shim course must be compacted with a minimum of three passes of a pneumatic rubber tired roller unless otherwise approved by the Engineer for variance. Option B - Vibratory Compaction is not permitted when compacting HMA concrete courses on structural bridge decks, or other structures with less than 2 feet of cover.

A. Option A. Three Roller Compaction Train. Under this option, initially roll all HMA mixtures with an approved steel-wheel roller operating in a static mode. Overlap the previous roller pass by one-half the width of the roller.

Immediately following the initial rolling, roll the mat with an approved pneumatic rubber-tired roller. A minimum of 3 passes of the rubber-tired roller will be required. One pass is defined

as one movement of the roller over any point of the pavement in either direction.

Immediately following the intermediate rolling, finish roll the mat with a steel-wheel roller to remove all shallow ruts, ridges, roller marks, and other irregularities from the surface.

Use this option only when the compacted thickness of the finished mat is 4 inches or less. Unless approved by the Engineer, the roller speeds shall not exceed 3 mph. When paving multiple lanes simultaneously, increase the required number of rollers proportionately for each additional full lane width unless otherwise permitted by the Engineer.

B. Option B - Vibratory Compaction. Under this option, use vibratory rollers appearing on the current Approved List - HMA Concrete Vibratory Compaction Equipment. For each project where a vibratory roller is used, furnish a vibrating reed tachometer for the exclusive use of the Engineer. The vibrating reed tachometer must have a frequency range of 1000 to 4000 vpm with a minimum reed interval of 50 vpm between 1000 and 2000 vpm and a minimum reed interval of 100 vpm between 2000 and 4000 vpm.

Operate vibratory rollers at a uniform speed not exceeding 2 1/2 mph (220 fpm) on all pavement courses. Complete all turning of the compaction equipment on material which has had a minimum of one roller pass.

The required number of passes listed in Table 403-2, Number of Passes, is recommended and may be increased or decreased if, in the opinion of the Engineer, adequate density can be achieved. Complete all breakdown roller passes before the mat temperature falls below 250ºF. One vibratory pass is defined as one movement of one drum of the roller over any point of the pavement in either direction. One static pass is defined as one movement of the roller over any point of the pavement in either direction. Remove all ruts, ridges, roller marks or other irregularities from the surface using static rolling. The Engineer may alter the compaction procedures for small areas where the specified procedures are not practical.

If the Engineer determines that unsatisfactory compaction is being obtained or damage to highway components and/or adjacent property is occurring using vibratory compaction equipment, then immediately cease using this equipment and proceed with the work in accordance with the conventional compaction procedures stipulated under Option A at no additional cost.

TABLE 403-2 NUMBER OF PASSES

Pavement Courses	Option A Three Roller Train (Static)		Option B Vibratory Rollers	
	Steel Wheel Roller	Pneumatic Roller	Vibratory Passes	Static Passes
Base (Open Graded Each Lift)	4	3	4	2
Base (Dense-Graded)	4	3	4	2
Binder (Dense-Graded)	2	3	2	2
Top (Dense-Graded All Types)	2	3	2	2

When the compaction procedure being used fails to produce results acceptable to the Engineer, adjust the procedure to obtain the desired results. Rollers will move at a slow and uniform speed. The roller drive roll or wheel will be nearest the paver.

403-4 METHOD OF MEASUREMENT. The Engineer shall measure the quantity of the HMA placed and compacted in the accepted work. The quantity shall be measured in tons to the

nearest 0.01 and determined from the delivery ticket.

Each delivery vehicle supplying HMA mixture shall be accompanied with a delivery ticket indicating the total quantity in tons being delivered. The quantity on the delivery ticket shall be determined from the automated proportioning system or the delivery vehicle weigh system. The delivery ticket shall contain the following minimum information:

- Ticket Number
- Plant Identification
- Contract Number
- Material Description, (including the PG-Binder Grade)
- Quantity of Material in Vehicle
- Date and Time

Make one legible copy of the delivery ticket available to the project inspector prior to the placement of the mixture.

403-5 BASIS OF PAYMENT. The unit bid price per ton for all pavement courses shall include the cost of all material, labor and equipment necessary to complete the work, including any cleaning pursuant to §403-3.02; cleaning of foreign material from the pavement as a result of construction operations; all necessary repairs to highway components and/or adjacent property caused by construction operations; any necessary work to correct surface tolerances per §402-3.10; and the scheduling and sequencing of work to conform with weather and seasonal limitations, and all temporary materials and work and/or repairs associated with paving operations outside the specified weather and seasonal requirements. Cleaning, sealing, and filling the cracks will be paid under Section 633. Tack coat will be paid under Section 407, Tack Coat.

PRICE ADJUSTMENT -BITUMINOUS CONCRETE

Price adjustments will be based on the New York State Office of General Services Formula as follows:

PRICE ADJUSTMENTS

1. Price adjustments allowed will be based on the October 1, 2013 average of the F.O.B. terminal price per ton of AC-10 or AC-20 asphalt cement (base average F.O.B. terminal price), at the following locations:

Chevron, Perth Amboy, New Jersey	United Refinery, Tonawanda, NY
United Refinery, Warren, PA	NOCO, Tonawanda, NY
CITGO, Bayonne, New Jersey	Suit-Kote, Cortland, NY
CITGO, Albany, New York	Gorman Brothers, Rensselaer, NY
Marathon, Tonawanda, New York	Bitumari, Montreal, CANADA

The average F.O.B. terminal price per ton for October 1, 2013 is $593.00 per English Ton

NOTE: The same grade of asphalt cement used in establishing the base average F.O.B. terminal price shall be used in establishing the new average F.O.B. terminal price.

In the event that one or more of the above named sources discontinue posting a price for asphalt cement, the base average F.O.B. terminal price shall be recalculated by removing

that location from the original base average F.O.B. terminal price. All new average F.O.B. terminal prices calculated from that date shall reflect the reduction in the number of reporting locations.

2. The new average F.O.B. terminal price will be determined based on the above F.O.B. terminal prices posted on the 20th of each month, hereafter known as the "Adjustment Date", during the contract period starting with March 20, 2014. However, price adjustments, in accordance with the formula below, will be effective for deliveries made on and after the first of the month i.e., April 1, 2014 following the adjustment date.

3. The unit prices per ton of bituminous concrete material purchased from any award based on this specification will be subject to adjustment based on the following formula:

   "Price Adjustment (per ton) EQUALS New Average F.O.B. Terminal Price MINUS Base Average F.O.B. Terminal Price TIMES Total % Asphalt plus Fuel Allowance."

NEW AVERAGE F.O.B. TERMINAL PRICE

The average F.O.B. terminal price for AC-10 or AC-20 asphalt cement at the above mentioned ten (10) locations as determined by the New York State Office of General Services on the 20th of the month.

TOTAL % ASPHALT PLUS FUEL

The percentage of total allowable asphalt and fuel for each item is as follows:

Item	Product Description	% Asphalt	Fuel Allowance	Total % Asphalt Plus Fuel Allowance
403.118902	Type 1 Base	5.00	1	6.00%
403.138902	Type 3 Binder	5.50	1	6.50%
403.158902	Type 5 Shim Course	8.25	1	9.25%
403.178902	Type 6 Top	6.20	1	7.20%
403.178202	Type 6F2 Top	6.20	1	7.20%
403.198902	Type 7 Top	6.85	1	7.85%
403.198202	Type 7F2	6.85	1	7.85%
E405.03	Mod. Stkpile Patch Mat.	6.00	1	7.00%

EXAMPLE

Item 403.16
Base Ave. Price = $150.00
New Ave. Price = $160.00
TOTAL % Asphalt plus Fuel = 7.4%
$160.00 - $150.00 X .074 = +0.74 per ton.

Positive Price Adjustment number shall be added to original per ton Bid price.

Negative Price Adjustment number shall be subtracted from original per ton Bid Price.

4. Price adjustments allowed by this contract shall be calculated and applied to the original bid prices. There will not be price adjustments unless the change amounts to more than $.10 per ton from the original bid prices. In these instances, a purchasing memorandum will not be issued and prices will revert back to the original quoted prices.

5. If at any time after **March 20, 2014** the average posted price of asphalt cement at the aforementioned terminals increases or decreases by $10.00 per ton or more over or under the last average F.O.B. posted price utilized by the State for adjustment purposes, the State may publish a special price adjustment which shall be effective eight (8) days subsequent to the date on which the change in the average F.O.B. posted price became effective.

6. All price adjustments will be computed by calculator to three decimal places.

7. Regardless of price adjustments allowed, at no time shall prices charged a County' contract participant be higher than those offered commercial or governmental accounts for similar or lower quantities.

8. Should these provisions result in a price structure which becomes unworkable, detrimental or injurious to the County or in prices which are not truly reflective of market conditions or which are deemed by the County to be unreasonable or excessive, and no adjustment in price is mutually agreeable, the County reserves the sole right upon ten (10) days written notice mailed to the contractor to terminate any contract resulting from this bid opening.

   Any introduction or withdrawal of a temporary voluntary allowance, terminal operator's allowance, or other discount offered to the trade in general, from the posted price of asphalt cement at any of the above terminals will be considered, for purposes of price adjustment, as a change in the F.O.B. terminal price.

Payment will be made under:

Item No.	**Item**	**Pay Unit**
E403.118902	Asphalt Concrete, Type 1 Base Course	Ton
E403.138902	Asphalt Concrete, Type 3 Binder Course	Ton
E403.158902	Asphalt Concrete Type 5 Shim Course	Ton
E403.178902	Asphalt Concrete, Type 6 Top Course	Ton
E403.198902	Asphalt Concrete, Type 7 Top Course	Ton
E403.198202	Asphalt Concrete, Type 7F2 Top Course	Ton

SECTION E403 – HOT MIX ASPHALT PAVEMENT FOR MUNICIPALITIES

ITEM E403.1101 - MODIFIED ASPHALT PAVEMENT BASE MIX

The job mix formula must be submitted at the time of the bid.

1.0 DESCRIPTION:

This work will consist of constructing a base course of aggregate and asphalt cement mixed in a central plant prepared in reasonable close conformity with guidelines established by the Purchasing Agency. New York State Standard Materials Specifications, Sections 401 and 403 shall apply; with the following deviations:

A. COMPOSITION:
Coarse aggregates and fine aggregates shall be combined in such proportions that the resulting blend shall be directed by the Laboratory, but within the following limits.

TABLE 1

Screen Size	Total % Passing
2”	100
1½	95-100
1”	75-95
½”	40-70
¼”	20-40
1/8”	12-28
#20	5-22
#200	0-4

The aggregate is to be 100% Crushed (May be modified with the mutual consent of the Laboratory and the Purchasing Agency).

B. BITUMEN CONTENT:

Shall be established by the Laboratory at optimum asphalt content within the following limits:

Bitumen (Percent of Total Mix) 3.5%-5.0%

C. ADDITIONAL REQUIREMENTS:

The job mix formula shall be determined from a laboratory mix design, in accordance with the SHRP Gyratory Compaction, level l procedure developed for this mixture.

SHRP Gyratory Compaction Gyrations: To be determined by Laboratory and based upon the aggregate sample.

TABLE 2

Air Voids %	4.0-8.0
Moisture Content %, Max.	0.5
VMA %	13+

A job mix formula (JMF) shall be established by the laboratory. This includes the bitumen content and gradation. The JMF tolerance for the bitumen content and gradation in production samples are listed below.

TABLE 3
Job Mix Formula Tolerances
Based On Single Test

Screen Size	% Passing
l/2”and larger	+/- 7
l/4”	+/- 7
l/8”	+/- 7 |
#20	+/- 5
#200	+/- 2
AC	+/- 0.5

D. MATERIALS:
Materials shall be:
Coarse Aggregate: 703-02
Fine Aggregate: 703-01
Modified Asphalt Cement: To meet the attached “**Modified Asphalt Cement**” criteria.

E. MIXING:
Mixing shall be done in accordance with 401.3.12.
The mixing temperature shall be 260-320 degrees F.

F. PRICE ADJUSTMENTS:

Will be based on the New York State Office Of General Services Formulas, but shall exceed by 1% (one percent) the job mix formula.

MODIFIED ASPHALT PAVEMENT BASE MIX

TABLE 4

SCREEN SIZES

Mixture Requirements (2)	Maximum Size Aggregate Designation		
	Modified Base Mix	Modified Binder Mix	Modified Surface Mix
Screen Size: 2”	100		
l- l/2”	95-100	100	
1”	75-95	95-100	
¾””			100
½””	40-70	55-80	95-100
¼”	20-40	25-50	53-75
1/8”	12-28	12-32	25-48
#20	5-22	5-22	10-28
#200	0-4	0-4	0-5
****Modified Asphalt Content	3.5-5.0	4.0-5.5	5.5-7.0
Mix Temperature, Degrees F.	260-320	260-320	260-320
SHRP Gyratory Compactive Effort	**See Note #1**	Not Applicable	Not Applicable
Marshall Hammer Compactive effort 75 blows per side @ 275 degrees F.	NOT APPLICABLE	75	75
Stability, lb., min. @ 140 degrees F.	Not Applicable	1200+	1200+
Flow, 0.01/in., Minimum	Not Applicable	6-16	6-16
Air Voids, %	4.0-8.0	4.0-6.0	4.0-6.0
VMA	13+	14+	15+
Moisture %, Maximum	0.5	0.5	0.5
Suggested Lift Thickness	3” Minimum	2” Minimum	1.5” Minimum

(1) Compactive effort based on aggregate

(2) Aggregate to be 100% crushed (may be modified by mutual consent Laboratory and Purchasing Agency

MODIFIED ASPHALT PAVEMENT BASE MIX

TABLE 5

CHARACTERISTIC (1)	MG 10-30 Minimum	METHOD
Viscosity (2) @ 140 degrees F., P., 1 sec	1000	D-4957
Viscosity (3) @ 275 degrees F., P., 10 sec.-1	7	D-4957
Penetration @ 77 degrees F., dmm.	55	D-5
Penetration @ 39 degrees F., 200 g. 60 sec, dmm.	20	D-5
Flash Point, degrees F.	475+	D-92
Solubility, %	99+	D-2042
Softening Point, degrees F (1)	130+	D-36
Test After Thin Film Oven Test (TFOT) Viscosity (2) @ 140 degrees F., P., 1 sec-1	1000	D-4957
Vis. ATFOT/Vis. BTFOT, Maximum	Maximum 2.5	

(1) Handling of all samples for testing shall be in accordance with ASTM D-4957 Section 7.2, which requires heating the sample in an oven maintained at 383 +/-4 degrees F. Stir the sample occasionally until homogenous and pour in suitable container for testing. Pouring temperatures should be 356 +/-4 degrees F. (180 +/-2 degrees Celsius) on all tests.

(2) Normally run using a #200 Modified Koppers Viscometer tube at 300 mm of vacuum.

(3) Normally run using a #50 Modified Koppers Viscometer tube at 30 mm of vacuum.

Payment will be made under:

Item No.	Item	Pay Unit
E403.1101	Modified Asphalt Pavement Base Mix F.O.B. Suppliers Facility	Ton

SECTION E403 – HOT MIX ASPHALT PAVEMENT FOR MUNICIPALITIES

ITEM E403.1301 - MODIFIED ASPHALT PAVEMENT BINDER MIX

The job mix formula must be submitted at the time of the bid.

1.0 DESCRIPTION:

This work will consist of constructing a binder course of aggregate and asphalt cement mixed in a central plant prepared in reasonable close conformity with guidelines established by the Purchasing Agency. New York State Standard Materials Specifications, Section 401 and 403 shall apply; with the following deviations:

A. Composition:

Coarse aggregates and fine aggregates shall be combined in such proportions that the resulting blend shall be directed by the Laboratory, but within the following limits.

TABLE 1

Screen Size	Total % Passing
2”	100
1½	95-100
1”	75-95
½”	40-70
¼”	20-40
1/8”	12-28
#20	5-22
#200	0-4

The aggregate is to be 100% Crushed.
(May be modified with the mutual consent of the Laboratory and the Purchasing Agency).

B. Bitumen Content:

Shall be established by the Laboratory at Optimum asphalt content within the following limits:
Bitumen (Percent of Total Mix) 4.0%-5.5%

C. Additional Requirements:

The job mix formula shall be determined From a laboratory mix design, in accordance with the latest edition of the Asphalt Institute’s publication: *Mix Design Methods for Asphalt Concrete (MS-2)* (Available at http://www.asphaltinstitute.org) except the mixture shall be held at compaction temperatures for 30 minutes upon completion of mixing.

MODIFIED ASPHALT PAVEMENT BINDER MIX

TABLE 2

Marshall Compaction @ 275 degrees F.	75 blows per side
Marshall Stability, lb., Min. @ 140 degrees F.	1200+
Marshall Flow, 0.01/in. min	6-12
Air Voids %	4.0-6.0
Moisture Content %, Max.	0.5
VMA %	14+ for 1 inch nominal

A job mix formula (JMF) shall be established by the laboratory. This includes the bitumen content and gradation. The JMF tolerances for the bitumen content and gradation in production samples are listed below.

TABLE 3

Job Mix Formula Tolerances
Based on Single Test

Screen Size	% Passing
½" and larger	+/- 7
¼"	+/- 7
1/8"	+/- 7
#20	+/- 2
#200	+/- 0.5

Production samples will also be checked in accordance with Asphalt Institute's MS-2 procedures for air voids and VMA on a once per 4,000 ton lot. The air voids and VMA must comply with the original mix design criteria. If samples fail to meet air voids and VMA, then production shall be stopped until corrective action can be taken.

D. Materials:

Materials shall be:

Coarse Aggregate: 703-02
Fine Aggregate: 703-01

(Aggregate to be 100% crushed unless specified by mutual agreement of the Laboratory and the Purchasing Agency).

Modified Asphalt Cement: To meet the attached "Modified Asphalt Cement" criteria.

E. Mixing:

Mixing shall be done in accordance with 401.3.12. The mixing temperature shall be 260-320 degrees F.

MODIFIED ASPHALT PAVEMENT BINDER MIX

F. Price Adjustments:

Will be based on the New York State Office of General Services Formulas, but shall exceed by 1% (one percent) the job mix formula.

TABLE 4
SCREEN SIZE

Mixture Requirements (2)	Maximum Size Aggregate Designation		
	Modified Base Mix	Modified Binder Mix	Modified Surface Mix
Screen Size: 2”	100		
I l/2”	95-100	100	
1”	75-95	95-100	
¾””			100
½””	40-70	55-80	95-100
¼”	20-40	25-50	53-75
1/8”	12-28	12-32	25-48
#20	5-22	5-22	10-28
#200	0-4	0-4	0-5
****Modified Asphalt Content (%)	3.5-5.0	4.0-5.5	5.5-7.0
Mix Temperature, Degrees F.	260-320	260-320	260-320
SHRP Gryratory Compactive Effort	**See Note #1**	Not Applicable	Not Applicable
Marshall Hammer Compactive effort 75 blows per side @ 275 degrees F.	Not Applicable	75	75
Stability, lb., min. @ 140 degrees F.	Not Applicable	1200+	1200+
Flow, 0.01/in., Minimum	Not Applicable	6-16	6-16
Air Voids, %	4.0-8.0	4.0-6.0	4.0-6.0
VMA	13+	14+	15+
Moisture %, Maximum	0.5	0.5	0.5
Suggested Lift Thickness	3” Minimum	2” Minimum	1.5” Minimum

(1) Compactive effort based on aggregate

(2) Aggregate to be 100% crushed (may be modified by mutual consent Laboratory and Purchasing Agency

MODIFIED ASPHALT PAVEMENT BINDER MIX
TABLE 5

CHARACTERISTIC (1)	**MG 10-30 Minimum**	**METHOD**
Viscosity **(2)** @ 140 degrees F., P., 1 sec	1000	D-4957
Viscosity **(3)** @ 275 degrees F., P., 10 sec.-1	7	D-4957
Penetration @ 77 degrees F., dmm.	55	D-5
Penetration @ 39 degrees F., 200 g. 60 sec, dmm.	20	D-5
Flash Point, degrees F.	475+	D-92
Solubility, %	99+	D-2042
Softening Point, degrees F (1)	130+	D-36
Test After Thin Film Oven Test (TFOT) Viscosity (2) @ 140 degrees F., P., 1 sec-1	1000	D-4957
Vis. ATFOT/Vis. BTFOT, Maximum	**Maximum** 2.5	

(4) Handling of all samples for testing shall be in accordance with ASTM D-4957 Section 7.2, which requires heating the sample in an oven maintained at 383 +/-4 degrees F. Stir the sample occasionally until homogenous and pour in suitable container for testing. Pouring temperatures should be 356 +/-4 degrees F. (180 +/-2 degrees Celsius) on all tests.

(5) Normally run using a #200 Modified Koppers Viscometer tube at 300 mm of vacuum.

(6) Normally run using a #50 Modified Koppers Viscometer tube at 30 mm of vacuum.

Payment will be made under:

Item No.	**Item**	**Pay Unit**
E403.1301	Modified Asphalt Pavement Binder Mix F.O.B. Suppliers Facility	Ton

SECTION E403 – HOT MIX ASPHALT PAVEMENT FOR MUNICIPALITIES

ITEM E403.1701 - MODIFIED ASPHALT PAVEMENT SURFACE MIX

The job mix formula must be submitted at the time of the bid.

1.0 DESCRIPTION:

This work will consist of constructing a surface course of aggregate and asphalt cement mixed in a central plant prepared in reasonable close conformity with guidelines established by the Purchasing Agency. New York State Standard Materials Specifications, Section 401 and 403 shall apply; with the following deviations:

A. Composition:

Coarse aggregates and fine aggregates shall be combined in such proportions that the resulting blend shall be directed by the Laboratory, but within the following limits.

TABLE 1

Screen Size	Total % Passing
2”	100
1½	95-100
1”	75-95
½”	40-70
¼”	20-40
1/8”	12-28
#20	5-22
#200	0-4

The aggregate is to be 100% Crushed. (May be modified with the mutual consent of the Laboratory and the Purchasing Agency).

B. Bitumen Content:

Shall be established by the laboratory at optimum asphalt content within the following limits:
Bitumen (Percent of Total Mix) 5.5%-7.0%

C. Additional Requirements:

The job mix formula shall be determined from a laboratory mix design, in accordance with the latest edition of the Asphalt Institute’s publication: *Mix Design Methods for Asphalt Concrete (MS-2)*, (Available at http://www.asphaltinstitute.org) except the Mixture shall be held at compaction temperature for 30 minutes Upon completion of mixing.

MODIFIED ASPHALT PAVEMENT SURFACE MIX
TABLE 2

Marshall Compaction @ 275 degrees F.	75 blows per side
Marshall Stability, lb., Min. @ 140 degrees F.	1200+
Marshall Flow, 0.01/in. min	6-12
Air Voids %	4.0-6.0
Moisture Content %, Max.	0.5
VMA %	14+ for 1 inch nominal

A job mix formula (JMF) shall be established by the laboratory. This includes the bitumen content and gradation. The JMF tolerances for the bitumen content and gradation in production samples are listed below.

TABLE 3
Job Mix Formula Tolerances
Based on Single Test

Screen Size	% Passing
½" and larger	+/- 7
¼"	+/- 7
1/8"	+/- 7
#20	+/- 2
#200	+/- 0.5

Production samples will also be checked in accordance with Asphalt Institute's MS-2 procedures for air voids and VMA on a once per 4,000 ton lot. The air voids and VMA must comply with the original mix design criteria. If samples fail to meet air voids and VMA, then production shall be stopped until corrective action can be taken.

D. Materials:

Materials shall be:

Coarse Aggregate: 703-02
Fine Aggregate: 703-01

(Aggregate to be 100% crushed unless specified by mutual agreement of the Laboratory and the Purchasing Agency).

Modified Asphalt Cement: To meet the attached "Modified Asphalt Cement" criteria.

E. Mixing:

Mixing shall be done in accordance with 401.3.12. The mixing temperature shall be 260-320 degrees F.

MODIFIED ASPHALT PAVEMENT SURFACE MIX

F. Price Adjustments:

Will be based on the New York State Office Of General Services Formulas, but shall exceed by 1% (one percent) the job mix formula.

TABLE 4
SCREEN SIZES

Mixture Requirements (2)	Maximum Size Aggregate Designation		
	Modified Base Mix	Modified Binder Mix	Modified Surface Mix
Screen Size: 2”	100		
I l/2”	95-100	100	
1”	75-95	95-100	
¾””			100
½””	40-70	55-80	95-100
¼”	20-40	25-50	53-75
1/8”	12-28	12-32	25-48
#20	5-22	5-22	10-28
#200	0-4	0-4	0-5
****Modified Asphalt Content (%)	3.5-5.0	4.0-5.5	5.5-7.0
Mix Temperature, Degrees F.	260-320	260-320	260-320
SHRP Gryratory Compactive Effort	**See Note #1**	Not Applicable	Not Applicable
Marshall Hammer Compactive effort 75 blows per side @ 275 degrees F.	Not Applicable	75	75
Stability, lb., min. @ 140 degrees F.	Not Applicable	1200+	1200+
Flow, 0.01/in., Minimum	Not Applicable	6-16	6-16
Air Voids, %	4.0-8.0	4.0-6.0	4.0-6.0
VMA	13+	14+	15+
Moisture %, Maximum	0.5	0.5	0.5
Suggested Lift Thickness	3” Minimum	2” Minimum	1.5” Minimum
(1) Compactive effort based on aggregate			
(2) Aggregate to be 100% crushed (may be modified by mutual consent Laboratory and Purchasing Agency			

MODIFIED ASPHALT PAVEMENT SURFACE MIX
TABLE 5

CHARACTERISTIC (1)	**MG 10-30 Minimum**	**METHOD**
Viscosity **(2)** @ 140 degrees F., P., 1 sec	1000	D-4957
Viscosity **(3)** @ 275 degrees F., P., 10 sec.-1	7	D-4957
Penetration @ 77 degrees F., dmm.	55	D-5
Penetration @ 39 degrees F., 200 g. 60 sec, dmm.	20	D-5
Flash Point, degrees F.	475+	D-92
Solubility, %	99+	D-2042
Softening Point, degrees F (1)	130+	D-36
Test After Thin Film Oven Test (TFOT) Viscosity (2) @ 140 degrees F., P., 1 sec-1	1000	D-4957
Vis. ATFOT/Vis. BTFOT, Maximum	**Maximum** 2.5	

(7) Handling of all samples for testing shall be in accordance with ASTM D-4957 Section 7.2, which equires heating the sample in an oven maintained at 383 +/-4 degrees F. Stir the sample occasionally until homogenous and pour in suitable container for testing. Pouring temperatures should be 356 +/-4 degrees F. (180 +/-2 degrees Celsius) on all tests.

(8) Normally run using a #200 Modified Koppers Viscometer tube at 300 mm of vacuum.

(9) Normally run using a #50 Modified Koppers Viscometer tube at 30 mm of vacuum.

Payment will be made under:

Item No.	**Item**	**Pay Unit**
E403.1701	Modified Asphalt Pavement Surface Mix F.O.B. Suppliers Facility	Ton

SECTION E403 – HOT MIX ASPHALT PAVEMENT FOR MUNICIPALITIES

ITEM E403.9901 – PAVER PLACED SURFACE TREATMENT

Description:

The **Paver Placed Surface Treatment** system shall consist of a warm polymer modified emulsion sprayed immediately preceding the application of a hot mix asphalt wearing course which forms a homogeneous well-textured and wearing surface that can be opened to traffic immediately on cooling. The nominal thickness of the layer shall be 5/8 inch; the maximum thickness of the mat shall not exceed 1-½ inches.

Polymer Modified Asphalt Emulsion Material:

The liquid material shall be a cationic, rapid setting, asphalt emulsion, NYS item 702-4001 except as modified in **Data Table I – Polymer Modified Asphalt Emulsion**. The emulsion shall be obtained from a storage facility that has been approved by the Director of the Materials Bureau, New York State Department of Transportation, within the current calendar year, prior to the start of work.

Hot Mix Asphalt Material for Wearing Course:

The wearing course shall be a mixture of single size coarse aggregate, fine aggregate, mineral filler and asphalt cement. The single size course aggregate shall be nominal ¼ inch for Type-A mix nominal 3/8 inch for Type B or nominal ½ inch for Type C mix, according to the gradation specifications in **Data Table II.** The hot mix asphalt concrete shall be obtained from a facility that has been approved by Director of Materials Bureau, New York State Department of Transportation, within the current calendar year, prior to the start of work. The asphalt content of the mix shall be 4.8-5.3% by weight of the total mix and must be computed based on the actual job mix.

Surface Preparation:

The following items will be performed by the contracting agency, unless otherwise directed.

A) Manhole covers, water valves, catch basins, and other such drawings shall be clearly referenced for location and adjustment after the surfacing operation.

B) Thermoplastic traffic markings shall be removed. All vegetation at the edge of the pavement shall be removed.

C) Pavement cracks and joints, greater than ¼ inch wide shall be cleaned and filled with an approved material prior to surfacing operation.

D) Before applying **Paver Placed Surface Treatment,** serious surface irregularities shall be corrected. Wheel ruts greater than 1 inch in depth shall be filled prior to the resurfacing operation.

E) The pavement surface area to be overlaid shall be cleaned and made free of any debris that may hinder bonding of the overlay.

Application: Paver Placed Surface Treatment shall be placed on a dry or damp, but not on a wet pavement surface. The pavement temperature shall be not less than 45º F and rising.

The polymer modified asphalt emulsion shall be applied by the asphalt emulsion spray system mounted on the self-priming paver. The spray system shall accurately uniformly and continuously monitor the rate of application across the entire width to be overlaid.

The rate of spray shall be 0.2 ± 0.05 gallons per square yard. The asphalt emulsion shall be applied at a temperature of 140º F - 180º F. No wheel or other part of the paving machine shall come into contact with the polymer modified asphalt emulsion before the hot mix asphalt-wearing course is applied.

The hot asphalt concrete wearing course shall be delivered to the self-priming paver at a temperature of 315º F + 15º F. The application rate of the hot asphalt aggregate mixture shall be:

Type A (nominal ¼ inch) 50 ± 10 pounds per square yard
Type B (nominal ⅜ inch) 55 ± 10 pounds per square yard
Type C (nominal ½ inch) 60 ± 10 pounds per square yard

The hot mix asphalt-wearing course shall be spread over the polymer modified asphalt emulsion within seconds of the spray application. Where shape correction is necessary or the old surface is porous, the application rate of the emulsion and hot mix asphalt wearing course may need to be increased.

Compaction of the **Paver Placed Surface Treatment** shall be accomplished with a minimum of a, steel wheeled, double drum roller of a minimum dead weight of ten (10) tons before the material temperature has fallen below 180º F at mid-layer. Because of this speed of the paving machine, and if production is over 15,000 square yards per day, two-wheeled double drum rollers may be required.

Traffic: Maintenance and protection of traffic will be provided by the contracting agency.

The new pavement surface may be opened to traffic when rolling is completed and proper cooling has taken place. In general traffic can use the new surface at a distance of 300 feet behind the last roller.

Verification of Quantities and Testing: At the end of each working day or completed job site, a check shall be made to determine the quantities of polymer modified asphalt emulsion used. The check shall be made by means of the gauge on the self-priming paver or the unit used to transport the material. The total gallons of material sprayed shall be divided by the total square yards sprayed to determine yield per square yard.

The hot mix asphalt concrete spread rate shall be calculated by dividing the tonnage placed by the square yards covered to determine yield per square yard.

Samples of the hot mix asphalt shall be taken at a rate of 1 per 250 tons and tested for aggregate gradation and asphalt cement content. Samples of the polymer modified asphalt emulsion shall be taken once per tanker load or once per day.

At the conclusion of each day's production, delivery ticket or invoice shall be completed by the contractor and signed by a representative of the Contracting Agency.

DATA TABLE I

Polymer Modified Asphalt Emulsion: This material shall be cationic asphalt emulsion modified with an approved polymer, using either natural or synthetic latex. It shall be smooth and homogeneous and shall conform to the following requirements and be available on site at a temperature of not less than 140º F.

Test	Method	Minimum	Maximum
Polymer Content (% mass of Total residue		3.0	---
Demulsibility, % by wt. Residue	ASTM	40	---

DATA TABLE II
Single Size Coarse Aggregate Component Gradation

AASHTO Standard Sieves		Total Percent Passing By Weight		
US	mm	Type A (¼ inch)	Type B (⅜ inch)	Type C (½ inch)
¾	19	-	-	100
½	12.5	-	100	85 – 100
⅜	9.5	100	85 - 100	25 – 50
¼	6.3	85 – 100	0 - 15	0 – 15
4	4.75	25 – 50	0 - 3	0 – 3
8	2.36	0 - 3	0	0

DATA TABLE III
Coarse Aggregate

Tests	Method	Light Medium Traffic <200 Heavy Vehicle/Day	Heavy Traffic >200 Heavy Vehicle/Day
Los Angeles Abrasion Value, %	ASTM C131	<25	<20
Water Absorption %	ASTM C127	<2	<2
Flatness Index %	NFP 18-561	<20	<15
Flatness Coefficient (G/E) [1]	NFP 19-561	<1.58	<1.58
Crushing Ratio, %	Observation	100	100
Overall Cleanliness (% Pas #30)	ASTM C142	<2	<2
Resistance to Stripping[2]	ASTM D3625	>95	>95

[1] Where "G" is the smallest square opening through which the particles can pass and "E" is the slot through which the particles can pass.
[2] Anti-stripping agents may be required to provide acceptable values.

DATA TABLE IV
Fine Aggregate Component Gradation

AASHTO Standard Sieves		Percent Passing by Weight
US	**Metric**	**Type A, B or C**
#4	4.75	100
#8	2.36	90 - 100
#16	1.18	60 – 80
#30	0.60	45 – 60
#50	0.30	30 – 40
#100	0.15	20 – 30
#200	0.075	15 – 25
Crushing ratio, percent minimum (Observation)		100
Sand Equivalency, percent minimum (ASTM D2419)		

Mineral Filler, if requested, may be Hydrated lime, Fly Ash or Bag-house Fines 100% passing #100, 80 passing #200

DATA TABLE V
Combined Aggregate Gradations-Design Target Envelopes

AASHTO Standard Sieve Sizes		Total Percent Passing By Weight		
US	**Metric**	**Type A (1/4 inch)**	**Type B (3/8 inch)**	**Type C (1/2 inch)**
¾	19	-----	-----	100
½	12.5	-----	100	85 – 100
⅜	9.5	100	85 – 100	70 – 90
¼	6.3	85 – 100	30 – 50	30 – 50
#4	4.75	40 – 60	24 – 40	24 – 40
#8	2.36	21 – 32	21 – 32	21 – 32
#16	1.18	16 – 26	16 – 26	16 – 26
#30	0.60	12 – 20	12 – 20	12 – 20
#50	0.30	8 – 16	8 – 16	8 – 16
#100	0.15	5 – 10	5 – 10	5 – 10
#200	0.075	5 – 7	5 – 7	5 – 7
%PGB		4.9 – 5.3	4.8 – 5.2	4.8 – 5.2

Note: All aggregate percentages are based on the total weight of aggregate.

Asphalt Binder: Use the appropriate Performance Graded asphalt binder for the project geographical location and design traffic level.

SECTION E403 – HOT MIX ASPHALT PAVEMENT FOR MUNICIPALITIES

BASIS OF PAYMENT:
Allowable **Deductions** per square yard if municipality elects to supplement operation with their equipment and labor.

Municipality provides and operates equipment – item number E403.990110
Municipality transports material from plant to equipment – item number E403.990111

Payment will be made under:

Item No.	Item	Pay Unit
E403.990101	Paver Placed Surface Treatment (5,000 to 15,000 SY, Type A)	SY
E403.990102	Paver Placed Surface Treatment (5,000 to 15,000 SY, Type B)	SY
E403.990103	Paver Placed Surface Treatment (5,000 to 15,000 SY, Type C)	SY
E403.990104	Paver Placed Surface Treatment (15,000 to 30,000 SY, Type A)	SY
E403.990105	Paver Placed Surface Treatment (15,000 to 30,000 SY, Type B)	SY
E403.990106	Paver Placed Surface Treatment (15,000 to 30,000 SY, Type C)	SY
E403.990107	Paver Placed Surface Treatment (over 30,000 30,000 SY, Type A)	SY
E403.990108	Paver Placed Surface Treatment (over 30,000 30,000 SY, Type B)	SY
E403.990109	Paver Placed Surface Treatment (over 30,000 30,000 SY, Type C)	SY
E403.990110	Municipality provides and operates equipment	SY
E403.990111	Municipality transports material from plant to equipment	SY

ITEM E403.9903 – PLASTIC JOINT MATERIAL (ASTM D3405)

General:

This joint material is a hot poured material conforming to the requirements of ASTM D3405. In addition, equipment requirements are specified when the material is to be supplied in a containerized heated tow able unit.

Material Requirements:

Plastic Joint Material shall meet the requirements of ASTM D3405; Joint Sealants, Hot-Poured for concrete and asphalt pavements. The material will be accepted on the basis of the manufacturer's certification that it conforms to the requirements of ASTM D3405; and that the name of the Primary Source (Manufacturer) and Trade name of the sealant are approved by the NYSDOT. The bidder, upon request, shall submit a copy of the certification with typical test results for the material.

The supplier shall provide the purchaser with the trade name of the sealant, the manufacturer's batch number, recommended pouring temperature, safe heating temperature, and a copy of the manufacturer's recommendations pertaining to heating and application. The recommended pouring temperature shall be 10º F below the manufacturers designated safe heating temperature, with an allowable variation of +/- 10º F. Filler material that has exceeded the safe heating temperature, been heated at the pouring temperature in excess of six hours, or reheated shall not be used. All the above information shall be provided to the purchaser by the supplier with each delivery.

The Department reserves the right to conduct sampling and testing to verify specification Compliance.

Equipment Requirements:

The material is required to be supplied in heated containerized, towable units. The equipment shall consist of a double wall type melter, with space between the inner and outer shells filled with a heat transfer medium. Direct heating will not be allowed. Other methods of indirect heating satisfactory to the NYSDOT may be used. Positive temperature control and mechanical agitation shall be used. The unit shall be supplied with a thermometer to indicate the temperature of the sealant material in the container.

Units shall be equipped with an accessible spigot and a discharge hose with applicator wand. Discharge valves, hose and applicator wand shall be insulated to maintain proper sealant temperature. The units shall include recirculation pumps so the material can be recirculated through the wand to machine.

The applicator wand shall incorporate a shutoff valve, preferably located near the end of the wand tip. The spigot shall be designed to be used in conjunction with pour pots.

Minimum capacity of the unit shall be **250** gallons.

Delivery:

The unit is to be supplied with operator and small tools for the unit (squeegees, spark plugs, small parts, etc.) to insure the equipment operates properly and to introduce material as required.

The operator and unit, with material heated and ready for use, shall be at the yard of the requesting highway district facility by work shift start time.

The vehicle for transporting the operator, additional material and towing the unit to the job site will be provided by the purchasing agency.

The purchasing agency will supply supervision and maintain traffic control at the work site.

BASIS OF PAYMENT:

Option 1 – 2 Man Crew with ASTM D6690 Type II. Contractor shall supply operator and laborer to apply sealer. Municipality shall supply laborer to clean crack with air wand.

Option 2 – 3 Man Crew with ASTM D6690 Type II. Contractor shall supply operator and laborers to apply sealer and clean cracks with air wand.

Option 3 – 2 Man Crew with NYS 702-0700. Contractor shall supply operator and laborer to apply sealer. Municipality shall supply laborer to clean crack with air wand.

Option 4 – 3 Man Crew with NYS 702-0700. Contractor shall supply operator and laborers to apply sealer and clean cracks with air wand.

Alternate 1 – Contractor shall provide Maintenance and Protection of Traffic

Payment will be made under:

Item No.	Item	Pay Unit
403.990301	Plastic Joint Material Option 1	Gallon
403.990302	Plastic Joint Material Option 2	Gallon
403.990303	Plastic Joint Material Option 3	Gallon
403.990304	Plastic Joint Material Option 4	Gallon
403.990305	Plastic Joint Material Alternate 1	Gallon

SECTION E403 – HOT MIX ASPHALT PAVEMENT FOR MUNICIPALITIES

ITEM E403.991x – HOT MIX ASPHALT CONCRETE PAVEMENT (RECYCLE OPTION)

Description:

The provisions of Section 403 – Hot Mix Asphalt Concrete Pavement shall apply except that the Contractor has the option of recycling reclaimed asphalt pavement (RAP). RAP may be recycled in any of the following mixes or applications:

Asphalt Concrete – Type 1R Base
Asphalt Concrete – Type 3R Binder
Asphalt Concrete – Type 6R Top (for shoulders)

If the Contractor chooses the recycling option, the following modifications to the specification requirements shall apply:

Materials:

RAP shall consist of asphalt pavement, recovered by cold milling or other removal techniques approved by the Deputy Commissioner of Highways, as noted in attached specification E703-09 Reclaimed Asphalt Pavement.

Composition of Mixtures:

The blend percentage of RAP shall be selected within the limits shown in Table 1:

Table 1

Plant Type	Percent Reclaimed Material, Maximum
Drum Mixer	70
Batch	50

The recycled mixture of RAP, new aggregate and added asphalt cement shall meet the requirements specified in Table 401-1, Composition of Bituminous Plant Mixtures for aggregate gradation, asphalt cement content and temperature range. The added asphalt cement grade shall be selected as described herein.

For any bituminous mixture containing RAP, the Contractor shall formulate and submit to the Deputy Commissioner of Highways a Job Mix Formula (JMF) which shall include:

- Gradation and asphalt content of the RAP.
- Gradation of recycled mixture.
- Percentage of RAP added.
- New aggregate source(s)
- Total asphalt cement content (based on total mixture weight).
- Added asphalt cement content (based on total mixture weight).
- Grade of added asphalt cement.

SPECIAL SPECIFICATION FOR USE WITH E403.991x
E703-9 RECLAIMED ASPHALT PAVEMENT (RAP)

Scope:

This specification covers the material requirements for reclaimed asphalt pavement (RAP) for use in asphalt pavement recycling.

Material Requirements:

The aggregate component of the RAP shall meet the requirements of Section 703, Aggregates. The bitumen component of the RAP shall be asphalt cement and shall be free of significant contents of solvents, tars or other contaminating substances that will make the RAP unacceptable for recycling as determined by the Department. The RAP shall be separated according to specific pavement source by the Contractor unless otherwise permitted by the Deputy Commissioner of Highways or his representative.

The Department will use one of the following procedures to approve the RAP quality:

1) RAP obtained from which was constructed with asphalt cement, and aggregate that meet the current requirements of Section 703, Aggregates, will be approved by the Deputy Commissioner of Highways or his representative.

2) If the source of the RAP or its quality is not known, the Contractor shall submit to the department at least thirty (30) calendar days prior to the start of paving the following:

   a. Designated use of the RAP and approximate proportions.

   b. A five (5) pound (minimum) sample representing the RAP to be incorporated into the recycled mixture.

   c. A five (5) pound (minimum) sample of the aggregate extracted from the RAP for petrographic examination.

   d. The penetration test result (77° F, 100g, 5s) of the bituminous material recovered from the RAP.

   The Department will determine the acceptability of the RAP for the designated use. Details for sampling and testing the RAP are available from the Materials Bureau.

Basis of Acceptance:

The RAP will be accepted on the basis of one of the following:

1) Certification from the Contractor that the RAP is from a specific pavement, which was constructed with aggregates that meet current specification requirements and asphalt Cement.

2) Analysis of RAP and its components by the Department.

Bituminous Materials:

The added asphalt cement may be AC-20, AC-15, AC-10, AC-5, AC-2.5 or other asphalt cement grades approved by the Deputy Commissioner of Highways. The resultant penetration of the combined asphalt cement (reclaimed bitumen and added asphalt cement) prior to plant mixing shall be between sixty, (60) and one hundred (100). The grade of asphalt cement selected by the Contractor shall be in accordance with Department written instructions.

Construction Details:

RAP from each pavement source shall be stockpiled on free draining bases separately from other aggregates or RAP sources and shall be reclaimed from the stockpiles without contamination by foreign materials.

Prior to entry into the mixer the RAP shall have a reasonable uniform gradation from coarse to fine with a minimum of ninety-five (95%) percent passing the two (2”) inch sieve.

Plant Equipment:

RAP shall be fed into the plant by equipment specifically designed for recycling and shall be approved by the Deputy Commissioner of Highways. In addition, all requirements pertaining to aggregates shall apply to RAP including that the equipment for proportioning the RAP shall meet the requirements for automatic proportioning and recordation stipulated for aggregates in subsection 401-3.08.

If a batch type plant is used scalping, screens, grizzlies or similar devices shall be installed on the RAP feed bin(s) to remove any debris or other foreign material in excess of four (4”) inches. RAP shall be last in the aggregate weighing sequence. RAP draw weight (s) shall be increased to compensate for moisture content. Total mix time shall be sixty, (60) seconds minimum.

If a drum mix type plant is used, the RAP shall be fed into the drum so that it will not come in direct contact with the burner flame. Mixing of RAP with the new aggregate shall occur before the bituminous material introduction point.

Retained Moisture in Mixture:

The moisture content of the mixture upon discharge from the mixer shall not exceed one point zero (1.0%) percent when tested in accordance with Department written instructions.

BASIS OF PAYMENT:

The accepted quantities of hot reclaimed asphalt concrete pavement will be paid for at the contract price per ton for the bituminous materials:

Payment will be made under:

Item No.	Item	Pay Unit
E409.9911	Asphalt Concrete Type 1R Base F.O.B. Truck	Ton
E409.9912	Asphalt Concrete Type 3R Binder F.O.B. Truck	Ton
E409.9913	Asphalt Concrete Type 6R Top F.O.B. Truck	Ton

ITEM E403.9930 – COLD IN-PLACE RECYCLING OF BITUMINOUS PAVEMENT TYPE II TRAIN RECYCLING WITH HIGH FLOAT REJUVENATING AGENTS

Description:

This work shall consist of cold In-Place Recycling of existing, bituminous pavements using High Float HFRA-2 with Polymer, or HFMS-2 or HFMS-2 with Polymer or HFMS-2 with Rejuvenator, Rejuvenating Agent (HFRA-1) or High Float Rejuvenating Agent with Polymer (HFRA-2) with reclaimed asphalt (RAP) in such proportions as shall be determined by the Job Mix Formula and the Erie County Highway Department.

Materials:

The High Float Rejuvenating agent shall conform to the following:

Requirements	
Sieve Test Percent	0.10 Maximum
Storage Stability, one (1) day	1.0 Maximum
Stone Coating, shall pass	Note #1 or Note #2
Solubility in Trichloroethylene, percent	Ninety Seven point Five (97.5) percent
Flash Point, COC, Fahrenheit Minimum	Three Hundred Fifty (350°) degrees
Saturates, percent maximum	Twenty (20%) percent

Note: HFRA-2 denotes polymer modified material and shall comply with the Parent material (HFRA-1). HFRA-2 shall contain no less than two (2%) percent by weight polymer, based on the asphalt residue.

Additional Requirements:

To rejuvenate aged asphalt having a penetration between 10-20 to a penetration of 60 or more, the solids from the HFRA shall not exceed thirty (30%) percent by weight of aged asphalt.

Note #1:

ASTM Method D-244, except that the mixture of stone and asphalt emulsion shall be capable of being mixed vigorously for five (5) minutes, at the end of which period, the stone shall be thoroughly and uniformly coated. The mixture shall then be completely immersed in tap water and the water poured off. The stone shall be not less than ninety (90%) percent coated.

Note #2:

ASTM Method D-244, except that the mixture of stone and asphalt emulsion shall be mixed vigorously for five (5) minutes, then left to stand for three (3) hours. After which, the mixture shall be capable of being mixed an additional five (5) minutes. The mixture shall then be rinsed twice with approximately its own volume of tap water without showing appreciable loss in bituminous film. After the second mixing, the aggregate shall be at least ninety (90%) percent coated.

Note #3:

Float test ASTM method D-139, except that the residue from distillation shall be poured immediately into the float collar at five hundred (500° F) Fahrenheit. The water bath shall be maintained at the specified temperature +/- one (1° F) degree Fahrenheit.

Composition of Completed Recycled Asphalt Mixture:

Mixture Requirements Screen Size	General Limits Percent Passing
2”	95-100 %
1”	90-100 %
½”	60-90 %
¼ “	38-74 %
⅛”	25-62 %
80	4-16 %
200	2-8 %

Bituminous Material: Percent of bitumen (20) 4.5 – 7.0 %

Note #1: Aggregate percentages are based on total weight of aggregate.

Note #2: Bitumen content is based on the total weight of the mix, exclusive of water or oil distillable.

Test on ABSON Recovery of Completed Recycled Asphalt Mix

	Minimum	Maximum
Penetration, 77° F, 100g, 5sec	60	200
Solubility in Trichloroethylene, %	99.0	----
Dictility 60° F, 5 cm/min, cm	40	----
Flash Point, ° F	350	----
Loss on Heating, Percent	----	1.5

Aggregate:

The mineral aggregate shall conform to the requirements set out in the following referenced subsections in the NYSDOT Standard Specifications:

Fine Aggregate	Section 703.01
Coarse Aggregate	Section 703.02

Contractor Qualifications:

Contractor shall have access to a complete and permanently operating manufacturing Plant with facilities located within a reasonable delivery distance to the project sites.

Operator of plant facilities shall have minimum of two (2) years experience in the production of the type of material specified, to insure proper mixtures and satisfactory service. The vendor, at the time of bidding, shall own the equipment with which he intends to complete the contract, if so awarded.

Contractor shall be prepared upon twelve (12) hours prior notice to supply all required High Float Rejuvenating Agent (HFRA) at temperatures requested by the contracting Agency for specific project.

The bidder shall own, operate and maintain a working laboratory at his plant. The laboratory shall be equipped with all equipment necessary to perform all specified tests on the HFRA sample and recycled asphalt pavement (RAP) material. The laboratory shall be Operated by a full time qualified technician and shall be available for use by any Contracting Agency personnel. In addition, the laboratory shall also include sufficient equipment to test aggregate and mixes required by NYSDOT materials method #5. The Contracting Agency, may at any time, have samples tested by a certified independent testing laboratory.

Design, Certification and Demonstration:

Prior to commencing any mixing work, the successful bidder shall sample the recycled asphalt pavement (RAP) to be used on the project. The RAP material shall then be extracted by standard ASTM methods and as a minimum, the following shall be determined:

A) Complete asphalt residue in RAP
B) Penetration of aged asphalt in RAP
C) Sieve analysis of aggregate in RAP
D) Percentage, and type HFRA required to bring aged asphalt RAP to desired penetrations

After analyzing the RAP material, the supplier shall then submit a certified recommended Job Mix Formula to the Contracting Agency. The Job Mix Formula should include the following, as a minimum

A) Complete analysis of the RAP material.
B) Percentage of RAP materials to be included in mixture.
C) Percent, type, and size of virgin aggregate to be added (If Any).
D) Combined aggregate gradation.
E) Percent of asphalt residue in finished mixture.
F) Percent and type of HFRA to be added.
G) Target or design penetration of finished mixture.
H) Test on residue from **Abson Recovery** of completed **Recycled Asphalt** (RAM) as required in **Compositions of Completed Recycled Mixtures** section.
I) Core reports

Acceptance of the Job Mix Formula by the Contracting Agency is solely for the purpose of quality control, and in no way releases the Contractor from his responsibilities.

Either during or immediately after construction the Contractor shall provide complete certified test analysis of all Job Mix Formula parameters on the completed Cold Recycled Asphalt Mixture as directed by the Contracting Agency.

Equipment:

Grinding and Mixing the equipment for grinding, mixing and profiling the pavement surface shall be a power operated, full lane planing machine or grinder capable of removing, in one pass, a thickness of asphalt concrete necessary to provide profile, cross slope, and desired texture uniformly across the entire pavement surface up to ten (10) inches in one pass.

Minimum drum cutting width shall be ten feet six inches (10'-6"). The equipment shall be self-propelled with sufficient power, traction, and stability to maintain accurate depth of cut and slope. The cutting drum shall have downward cutting capability in order to control chunk size meeting the following gradation.

Chunk Size Gradation

Sieve Size	**Percent Passing**
3"	100%
2"	95-100%
#200	0-12%

In addition, the machine shall be so designed that the drum is capable of cutting with zero side clearances on at least one side. The reclaimed material will be discharged to the rear of the machine. The equipment shall be capable of accurately and automatically establishing profile grades along each edge of the machine (within +/- 1/8") by referencing from the existing pavement, by means of a ski or matching shoe, or from an independent system controlling grade elevation and cross slope at the given rate. The machine shall be equipped with a means to control dust and other particulate matter created by the cutting action. The speed of the machine shall be variable in order to leave the desired grid pattern surface texture. Determination of the type of carbide milling teeth shall be the sole discretion of the Contracting Agency if the intended milling is to be used as a serviceable riding texture for an indeterminate time.

When mixing in place, if it is necessary to add additional aggregate to meet gradation or depth requirements, the proper aggregate shall be placed uniformly over the existing surface at the proper rate prior to the grinding mixing, and application of the High Float Rejuvenator. The mixer shall be equipped with a stabilization package, consisting of an asphalt pump, totalizing meter and spray bar mounted within the mixing chamber. The asphalt pump shall be mechanically or electronically interlocked with the ground speed of the machine.

Compaction **shall be provided as a part of the recycled train.** It shall be accomplished by the use of double drum vibratory rollers of adequate capacity to insure proper compaction followed by a pneumatic tire roller of twenty-five (25) ton minimum capacity.

Contracting Agency to Provide:

A) Add aggregate (if required) delivered to the Contractor's spreader. **This item may be supplied by the Contractor as part of optional bids.**
B) Source of water in close proximity to the project location.
C) Permanent construction signs for the project
D) Maintenance and Protection of traffic. **This item may be supplied by the Contractor as part of optional bids.**
E) Any temporary striping required by the project.

Damage:

Payment shall be made to the Contractor for repair or replacement of any permanent element of the highway, which is completed to the stage of serving its intended function and is subsequently damaged by accident or by public traffic. The Contractor must supply satisfactory evidence that such damage was caused by a public traffic accident and not by vandalism or by the Contractor's equipment. Satisfactory evidence shall generally be limited to; accident reports filed with the Motor Vehicle Department, Police Agencies, of Insurance companies; statements by reliable unbiased eye witnesses; identification of the vehicle involved in the accident. Physical evidence that the damage was caused by a motor vehicle (such as tire marks, broken headlight glass) will not be sufficient unless it can be shown that the damage was not caused by the Contractor's vehicles or vandalism.

Work for which there is a bid item will be paid for at the unit price for that item. Work, for which there is not a bid item, will be paid for at an agreed price or by means of force account. Payment will not be made for repair or replacement in any way connected with untimely failure of any portion of the highway under public traffic, and the determination regarding this matter shall be made by the Contracting Agency, taking into consideration the normal life and amount of normal wear of the element involved.

This provision does not relieve the Contractor of the responsibility of having a wholly complete and acceptable job at the time of final inspection and acceptance of the entire contract. Payment for such damage shall be made only after the Contractor has demonstrated to the satisfaction of the Contracting Agency that he has made every reasonable effort to collect the costs from the persons responsible for the damage.

Measurement:

Work prescribed by this item will be measured by the square yard surface area. Square yard calculations will be based on dimensions determined from measurements of the actual area planed and textured as authorized. All bituminous materials will be measured and paid by the gallon.

Payment:

The work as prescribed by this item, measured as provided under the Measurement will be paid for at the unit price bid per square yard. The bituminous materials will be paid for under their appropriate items. Measurement and payment will be limited to the longitudinal length and width of which there is a definite texture present.

The price bid per square yard shall include all labor and supplies for recycling various highways in accordance with these specifications.

The price bid per gallon shall include HFRA, testing, labor and supplies, and a stabilization package on the grinding machine consisting of an asphalt pump, meter and a spray bar inside the cutting drum. The asphalt pump shall be a variable speed pump interlocked with the ground speed of the machine. The operation shall be capable of grinding, mixing, placing and compacting the recycled material at the desired width and depth requirements of the specification.

BASIS OF PAYMENT:

Payment will be made under:

Item No.	**Item**	**Pay Unit**
E406.993001	Cold In-Place Recycling of Bituminous Pavement, Type II (Under 7,500 SY at 1 – 3” depth)	SY
E406.993002	Cold In-Place Recycling of Bituminous Pavement, Type II (Under 7,500 SY, each additional 1” over 3”)	SY
E406.993003	Cold In-Place Recycling of Bituminous Pavement, Type II (Over 7,500 SY at 1 – 3” depth)	SY
E406.993004	Cold In-Place Recycling of Bituminous Pavement, Type II (Over 7,500 SY, each additional 1” over 3”)	SY
E406.993005	HFMS-2	Gallon
E406.993006	HFMS-2 with Polymer	Gallon
E406.993007	HFMS-2 with Rejuvenator	Gallon
E406.993008	HFFA-1	Gallon
E406.993009	HFFA-2	Gallon
E406.9930010	Maintenance & Protection of Traffic	SY
E406.9930011	Aggregate delivered to Contractor’s Equipment	Ton
E406.9930012	Hauling Trucks (if Required)	Hour
E406.9930013	Fog Seal Material – delivered and applied	Gallon

ITEM E403.9940 – COLD IN-PLACE RECYCLING OF BITUMINOUS PAVEMENT FULL DEPTH RECLAMATION TYPE III RECYCLING

Description:

This work shall consist of pulverizing roadway for a specified length width and depth, upgrading with virgin aggregate, as required and blending with an additive to produce a recycled in-place stabilized base materials.

Materials:

The stabilization additive shall be furnished by the contractor. The additive shall be the type and quantity specified in the Job Mix Formula and will be paid for under a separate pay item.

Virgin aggregate, if required, for grade or gradation control shall be furnished by the contractor or County and spread to a depth and width as necessary to assure conformity with the Job Mix Formula.

Water for dust control or compaction aid shall be furnished by the contractor and placed evenly across the surface of the work area to assure conformity with the Job Mix Formula.

The pulverized aggregate material in the roadway, including virgin aggregate (if any) shall meet the following specification:

Sieve Size	Percent Weight Passing
3”	100
2”	90-100
¼”	30- 65
#200	0-10*

Note: The top size of the pulverized material shall not exceed half the depth of the total recycled base course thickness after final compaction. Resident cobbles and oversize materials in the subbase beneath mat are not subject to this requirement.

Construction Requirements:

The roadway to be recycled shall be pulverized to the length, width and depth as specified by the County. The contractor shall be equipped to verify the actual depth of cut at any point throughout the project.

When required by the Job Mix Formula, additional aggregate shall be imported and spread over the pavement to be pulverized by the contractor or County, tailgating not permitted. This “new” aggregate shall then be combined with the material being recycled with the initial pass of the pulverized machine.

Shaping of the grade for profile may be required during various stages of the construction and shall be provided by the contractor or County under the direction of the project superintendent.

Application of the stabilizing material shall be through the computerized liquid metering spray system on the pulverizing machine. The type and amount of stabilizing agent to be added shall be as specified in the Job Mix Formula.

Shaping and compacting of the pulverized material throughout all construction phases shall be the responsibility of the contractor or the County.

Job Mix Formula:

It shall be the responsibility of the contractor to analyze the existing pavement structure. At least five (5) working days prior to the start of the work, written construction recommendation, laboratory analysis and Job Mix Formula shall be delivered to the Contracting Agency for approval. Core reports are required.

The Job Mix Formula shall be determined from field samples. Field Samples will be obtained from the pavement that is to be recycled and will consider the entire length of the reject and depth inclusive of the actual intended cut. The samples shall be submitted to a qualified laboratory for extraction of bituminous materials and analysis.

The specifics of the proposed mix design, analysis parameters, the number and location of the core samples shall be a joint recommendation of the contractor and the County.

Upon completion of the laboratory evaluation, A Job Mix Formula for the optimum mix design and a contractor's cost estimate for each project will be submitted to the County for approval.

Equipment:

The contractor shall furnish a self- propelled machine capable of pulverizing, in-place, the existing pavement and mixing any added aggregate to a design depth of twelve (12) inches. A multiple pass may be utilized to achieve the design recycle depth.

The machine shall be equipped with a computerized liquid proportions system capable of regulating and monitoring the liquid application rate relative to forward speed and shall be able to handle a complete range of liquid additives. The equipment shall be capable of mixing the liquid additives and the pulverized reclaimed pavement into a homogeneous mixture.

The cutting drum shall be able to up cut or down cut and have replaceable teeth. The minimum width of cut shall be one hundred twenty (120") inches and shall be fully maintained with adequate cutting teeth at all times throughout the work.

The contractor shall furnish a qualified operator and will be responsible for all movement of the equipment including trailer moves to and from the work site.

The method of recycling and the proposed equipment must be approved by the Contracting Agency.

Method of Measurement:

The quantity for payment will be measured by the square yard for material pulverized and mixed within the length, width and design depth of each project as ordered by the contracting agency. Liquid additives will be measured by the gallon.

Basis of Payment:

Payment will be based on the square yards of design depth of recycling work completed plus the gallons of stabilizing additive included in the work. The unit price per square yard includes the cost of equipment, maintenance, materials and labor necessary to operate the pulverizing equipment, grading, shaping, rolling and compaction and perform the laboratory analysis and to prepare and submit the Job Mix Formula. The unit price for stabilizing additive includes the cost of the supply and delivery of the stabilizing additive to the pulverizing machine.

Cold In-Place Recycling of Bituminous Pavement – Full Depth reclamation Type III Pulverize ONLY
The low bid for each respective depth of cut will be determined from line E403.994006 and E403.994007, which is the sum of the square yard price for pulverizing (E403.994003 or E403.994004) plus the cost of an application of Calcium Chloride Thirty-three (33%) percent solution at the rate of one gallon per square yard (E403.994005).

Note: Using one (1) gallon per square yard of liquid Calcium Chloride solution is only for the purpose of determining the low bid price for the work. The actual amount of liquid per square yard will vary depending on the Job Mix Formula.

Cold In-Place Recycling of Bituminous Pavement – Full Depth reclamation Type III With Emulsified Asphalt
The low bid for each respective depth of cut will be determined from line E403.9940014 and E403.9940015, which is the sum of the square yard price for pulverizing (E403.9940011 or E403.9940012) plus the cost of an application of Emulsified Asphalt at the rate of one gallon per square yard (E403.9940013).

Note: Using one (1) gallon per square yard of Emulsified Asphalt is only for the purpose of determining the low bid price for the work. The actual amount of liquid per square yard will vary depending on the Job Mix Formula.

SECTION E403 – HOT MIX ASPHALT PAVEMENT FOR MUNICIPALITIES

Payment will be made under:

Item No.	Item	Pay Unit
E403.994001	Cold In-Place Recycling of Bituminous Pavement, Type III Pulverize ONLY – Under 6”	SY
E403.994002	Cold In-Place Recycling of Bituminous Pavement, Type III Pulverize ONLY – Over 6”	SY
E403.994003	Cold In-Place Recycling of Bituminous Pavement, Type III Pulverize ONLY – 33% Calcium Chloride Solution, Under 6”	SY
E403.994004	Cold In-Place Recycling of Bituminous Pavement, Type III Pulverize ONLY – 33% Calcium Chloride Solution, Over 6”	SY
E403.994005	Cold In-Place Recycling of Bituminous Pavement, Type III Pulverize ONLY – 33% Calcium Chloride Solution, Under 6”, delivered and Added to the mix	SY
E403.994006	Cold In-Place Recycling of Bituminous Pavement, Type III Pulverize ONLY – 33% Calcium Chloride Solution, Under 6”, delivered and added to the mix	SY
E403.994007	Cold In-Place Recycling of Bituminous Pavement, Type III Pulverize ONLY – 33% Calcium Chloride Solution, Over 6”, delivered and added to the mix	SY
E403.994008	Reduction for Municipality Grading and Rolling, Under 6” Pulverize ONLY –	SY
E403.994009	Reduction for Municipality Grading and Rolling, Over 6” Pulverize ONLY –	SY
E403.9940010	Virgin Aggregate: Pulverize ONLY	Ton
E403.9940011	Cold In-Place Recycling of Bituminous Pavement, Type III Emulsified Asphalt – Under 6”	SY
E403.9940012	Cold In-Place Recycling of Bituminous Pavement, Type III Emulsified Asphalt – Over 6”	SY
E403.9940013	Cold In-Place Recycling of Bituminous Pavement, Type III Emulsified Asphalt delivered and added to the mix	SY
E403.9940014	Cold In-Place Recycling of Bituminous Pavement, Type III Emulsified Asphalt , delivered and added to the mix, under 6”	SY
E403.9940015	Cold In-Place Recycling of Bituminous Pavement, Type III Emulsified Asphalt, delivered and added to the mix over 6”	SY
E403.9940016	Reduction for Municipality Grading and Rolling, Under 6” Emulsified Asphalt	SY
E403.9940017	Reduction for Municipality Grading and Rolling, Over 6” Emulsified Asphalt	SY

ITEM E403.9950 – COLD IN-PLACE RECYCLING OF BITUMINOUS PAVEMENT CENTRAL PLANT RECYCLING OPTION WITH HIGH FLOAT REJUVENATING AGENTS

All conditions as outlined in the preceding recycling specifications will apply with the following Central Plant Options;

Equipment:

The equipment for grinding and profiling pavement surface shall be a power operated, planing machine or grinder capable of removing, in one pass, a thickness of asphaltic concrete necessary to provide profile, cross slope, and desired texture uniformly across the entire pavement surface up to ten (10”) inches in one pass. Minimum drum cutting width shall be six feet six inches (6’6”). The equipment shall be self-propelled with sufficient power, traction, and stability to maintain accurate depth of cut and slope. The cutting drum shall have downward cutting capability in order to control chunk size meeting the following gradations:

Chunk Size Gradation	
Sieve Size	**Percent Passing**
3”	100%
2”	95-100%
#200	0-12%

In addition machine shall be so designed that the drum is capable of cutting with a zero side clearance on at least one side. The reclaimed material will be discharged to the rear of the machine on to a thirty-six (36”) inch pickup conveyor belt. The conveyor belt will either windrow material behind the machine and clear of the tracks or transfer material to a minimum thirty-six (36”) inch wide truck, loading conveyor. The equipment shall be capable of accurately and automatically establishing profile grades along each edge of the machine (+/-1-1/8”) by referencing from the existing pavement by means of a ski or matching shoe or from an independent grade control and shall be controlled by an independent grade control and shall be controlled by an automatic system for controlling grade elevation and cross slope at a given rate. The machine shall be equipped with a means to control dust and other particulate matter created by the cutting action. The speed of the machine shall be variable in order to leave the desired grid pattern surface texture. Determination of the type carbide teeth shall be the sole discretion of the Contracting Agency, if the intended milling is to be used as a serviceable riding texture for an indeterminate time.

The pavement surface shall be removed to the depth, width, grade and cross section as directed by the Contracting Agency. The Contracting Agency may require that the pavement planing operations be referenced from an independent grade control in those areas where they deem this type of control to be appropriate. For this type of operation, the independent grade control shall be established and maintained by the Contracting Agency. In the event the entire pavement width along a section of the highway has not been planed to a flat surface by the end of a work period, resulting in a vertical or near vertical longitudinal face exceeding 1 ¼” in height, this longitudinal face shall be sloped in a manner acceptable to the Contracting Agency so as not to create a hazard to traffic

using the facility during periods when construction is not in progress. Transverse faces that are present at the end of a work period will be tapered in the manner approved by the Contracting Agency to avoid creating a hazard for traffic.

Contracting Agency to Provide:

A) Purchase, deliver, and stockpile any aggregate (if required). May be done by the Contractor if desired under optional bid.

B) Provide maintenance and protection of traffic (May be done by the Contractor if desired under optional bid).

C) Supply sufficient hauling trucks to haul RAP or recycled materials (May be done by the Contractor if desired under optional bid).

D) Furnish suitable stockpile area with adequate room for mixing and stockpiling.

E) Furnish loader with operator to stockpile RAP and charge portable mixing machine.

F) Provide source of water for the project.

G) Rollers and operators for compaction (May be done by the Contractor if desired under optional bid).

H) Raise and lower any structures in the highway (May be done by the Contractor if desired under optional bid).

J) Paver and crew for application of the driving surface (May be done by the Contractor if desired under optional bid).

ITEM E403.9950 – COLD IN-PLACE RECYCLING OF BITUMINOUS PAVEMENT CENTRAL PLANT RECYCLING OPTION WITH HIGH FLOAT REJUVENATING AGENTS

Payment will be made under:

Item No.	Item	Pay Unit
E406.995001	Cold In-Place Recycling of Bituminous Pavement, Central Plant Recycling with High Float (Under 7,500 SY at 1 – 3” depth)	SY
E406.995002	Cold In-Place Recycling of Bituminous Pavement, Central Plant Recycling with High Float (Under 7,500 SY, each additional 1”)	SY
E406.995003	Cold In-Place Recycling of Bituminous Pavement, Central Plant Recycling with High Float (Over 7,500 SY at 1 – 3” depth)	SY
E406.995004	Cold In-Place Recycling of Bituminous Pavement, Central Plant Recycling with High Float (Over 7,500 SY, each additional 1”)	SY

E406.995005	HFRA-1 (Includes pug mill and operator)	Gallon
E406.995006	HFRA-2 (Includes pug mill and operator)	Gallon
E406.995007	Paver with Operator	Day
E406.995008	Paver with Paving Crew	Day
E406.995009	Vibratory with operator	Day
E406.9950010	Structure for Adjusting Manholes (only applies to recycle project)	Structure
E406.9950011	Fog Seal (delivered and applied)	Gallon

ITEM E403.9960 - HOT IN-PLACE ASPHALT RECYCLING, HEATER SCARIFICATION OF EXISTING ASPHALT PAVEMENT

1.0 DESCRIPTION:

This item shall be part of a multi-step process of asphalt surface rehabilitation that consists of softening the existing flexible pavement with heat and thoroughly stirring spinning or tumbling the mixture, applying an asphalt rejuvenator, milling/remixing, reshaping and compacting the hot in-place recycled surface. Installing a surface treatment or overlay is a separate and/or concurrent function of this work.

2.0 EQUIPMENT REQUIREMENTS:

A. Preheater:

The preheating machine shall be one self-contained machine specifically designed to heat the upper layers of the existing asphaltic pavements. The preheating machine shall be a self-propelled and completely self-contained unit capable of operating at speeds from ten (10') feet to twenty-five (25') feet per minute while uniformly heating the existing surface of the asphalt.

The heating unit shall consist of multi-rows of burners of a type specifically designed for and capable of producing 48 million BTUH; LPG will be used for the heating fuel in compliance with the standards of the State's Air Pollution Control Laws. The BTUH production rate is based upon heating twelve (12') feet wide. Burners shall be located on the front of the heater boxes spaced no more than ten (10") inches apart to achieve proper heat penetration at the required temperature while causing no injury due to overheating the asphaltic surface.

The entire burner assembly shall be so designed so that it may be raised or lowered by a single control and capable of articulation. The burner assembly shall be adjustable in width from eight (8') feet to fourteen (14') feet. The entire heating unit shall be enclosed and vented to contain the heat and prevent damage to plant material or any structures along the roadway. Each unit shall be equipped with an on board 500 gallon water system to be used to adequately reduce the temperature of the exhaust in the venting system thereby preventing desiccation of trees and shrubs by evapotranspiration due to high heat. Hand hoses with adjustable nozzles will be placed on each unit to allow for prewetting of specific plants or objects.

B. Heater-Scarifier:

The heater-scarifier machine shall be one self-contained machine specifically designed to reprocess upper layers of existing asphalt pavements. The heater-scarifier machine shall be a self-propelled and completely self-contained unit capable of operating at speeds of ten (10') to twenty-five (25') feet per minute while uniformly heating, scarifying, applying rejuvenator, mixing, and screeding the existing pavement to a minimum depth of one (1") to one and one-half (1-1/2") inches at a minimum temperature of 250 degrees Fahrenheit. The wheel base shall not be less than eighteen (18') feet and the total weight shall not be less than 35,000 pounds.

The heating unit shall consist of multi-rows of burners of a type specifically designed for and capable of producing 48 million BTUH; LPG will be used for the heating fuel in compliance with the standards the State's Air Pollution Control Laws. The BTUH production rate is based upon heating twelve (12') feet wide. Burners shall be located on the front of the heater boxes spaced no more than ten (10") inches apart to achieve proper heat penetration at the required temperature while causing no injury due to overheating the asphaltic surface.

The entire burner assembly shall be so designed so that it may be raised or lowered by a single control and capable of articulation. The burner assembly shall be adjustable in width from eight (8') feet to fourteen (14') feet. The entire heating unit shall be enclosed and vented to contain the heat and prevent damage to plant material or any structures along the roadway.

All equipment shall conform to Federal, State and local DOT and Fire Marshall regulations, and laws relative to the transportation of LPG.

C. Scarifying Unit:

The scarifying unit consists of no less than two rows of spring loaded, carbide tip teeth adjustable in width from eight (8') to fourteen (14') feet in increments to one (1") inch and construction in one (1') foot sections to conform to the pavement contour to insure penetration of the teeth and prevent damage to utility structures.

D. Spraying Unit:

Immediately behind the teeth of the scarifying unit, an application of a polymer modified rejuvenator shall be applied to the newly remixed area. Nozzle size on the spray bar and pump shall be a combination that will deliver the approved rate of application according to the forward speed of the machine in conjunction with discretion of Highway Superintendent. The tank on the machine shall be heated, and the heating unit on the storage tank for rejuvenator shall be thermostatically controlled to maintain an even specified temperature.

In addition to the above, it will be required that the spraying unit on the machine be equipped with an electronic, digital measuring system (computer) to constantly monitor the quantity of rejuvenating agent being applied. This device will be calibrated to show gallons used to the nearest tenth.

E Mill/Remixer Unit:

Immediately following the application of the recycling agent, a dual-drum enclosed mill shall mill the heated asphalt to the depth of the heat thoroughly mixing the rejuvenating agent with the scarified and milled material. This mill/remixer system shall be an integral part of the scarifying machine and shall be located between the spraying system, which applies the rejuvenator, and the screed. This mill/remixer system shall be fully hydraulically operated and shall be able to work at variable speeds from o to 60 rpm, and shall be retractable from 14.6 ft. to 8.6 ft. wide. This mill shall also be able to break in the center to allow for quarter point and crown control.

No heater scarification can take place without this unit present and in operating condition.

F. Screed and Initial Compaction Unit:

1. Screed:

The hot Scarified material shall be uniformly distributed to the desired longitudinal and transverse section by the use of a heated, augered screed. The screed must be equipped with an adjustable crown control, and each end of the screed must have handwheel adjusting screws for providing the desired longitudinal and transverse section.

2. Compaction Unit:

Immediate compaction shall take place with rolling equipment of sufficient type and size to compact the recycled bituminous material to the required density. Normally this can be accomplished with the application of an eight (8) to twelve (12) ton vibratory roller. State specifications for bituminous concrete surfaces shall apply.

3.0 CONSTRUCTION REQUIREMENTS:

Pavement Preparations:

The entire area to be resurfaced shall be cleaned of all deleterious material. If required, the Owner shall broom clean the area prior to commencement of work or specify the contractor to do the same. The Contractor is required to provide traffic control.

Heating, Scarifying, Leveling, and Rejuvenating:

The existing asphaltic material shall be heated, scarified and mixed to a minimum depth of one (1") inch. Under no circumstances shall the scarifying teeth penetrate into the existing base.

The heated polymer modified rejuvenator shall be applied immediately following the scarifying teeth. The polymer modified rejuvenator is specifically formulated for use with the hot in-place recycling, and therefore, shall not be substituted.

The hot scarified material shall then be mill/remixed immediately following the application of the recycling agent to eliminate premature compaction of the hot recycled asphalt resulting in final differential compaction and to the desired longitudinal and transverse section by the use of an attached, heated, auguered screed. Directly behind the screed process shall be an 8 to 12 ton roller for compaction

Overlay:

The application of the final wearing surface consisting of either hot mix asphalt pavements, nova-chip, micro-paving, or chip seals follow after a prescribed interval or delay. These materials are applied with conventional equipment in conformance with standard construction methods. NOTE: Surface treatment not included in unit price (work to be done by others).

At all manholes, valve boxes, etc., the finished grade of the heater-scarifying process shall be transitioned to blend into the existing grade.

4.0 METHOD OF MEASUREMENT

Asphalt recycling performed and application of rejuvenating agent shall be measured by the square yard.

5.0 BASIS OF PAYMENT:

Prices shall include all labor, equipment, materials, fuels, supplies, rejuvenating agent, mobilization, bond and insurance required to complete the above item. Payment for heating, scarifying, application of rejuvenating agent, milling/remixing, and compaction will be made at the price bid per square yard.

Payment will be made under:

Item No.	**Item**	**Pay Unit**
Item 403.9960	Hot In-Place Asphalt Recycling, Heater Scarification of Existing Asphalt Pavement	SY

SPECIAL SPECIFICATIONS FOR EMULSIFIED RECYCLING AGENTS FOR USE IN ITEM E403.9960

These specifications cover emulsified recycling agents to be used in cold mix recycling or hot in-place recycling. The final acceptance of these materials shall be based on their performance to (a) restore the aged “old” asphalt characteristics to a consistency level appropriate for construction purposes, (b) restore the aged asphalt to its optimal chemical characteristics for durability, (c) provide sufficient additional binder to coat new aggregate that is added to the recycled mixture, and (d) provide sufficient additional binder to satisfy mixture design requirements.

The specific gravity of the emulsified recycling agent shall be reported for each shipment. The rejuvenating agent for hot in-place asphalt recycling shall be Koch Pavement Solutions product ERA-25P or approved equivalent.

TEST	ASTM METHOD	ERA-5 MIN.	ERA-5 MAX	ERA-25P MIN.	ERA-25P MAX
Viscosity, Saybold Furol @ 25 C, sec.	D244	15	85	15	85
Storage Stability Test, 1 Day	D244	–	1.0	–	1.0
Sieve Test, Retained on No. 20 Sieve Percent	D244	–	0.1	–	0.1
Cement Mixing, Test Percent	D244	–	2.0	–	2.0
Residue by Evaporation Percent	D244	65	–	65	–
Tests on Residue Viscosity @ 60 C cst	D2170	200	800		1000 5000
Torsional Recovery		20	–		
Base Recycling Agent (ie. Prior) to emulsification	D4552		RA-5	RA-25	

SECTION E405 - COLD MIX BITUMINOUS PAVEMENT (OPEN GRADED)

Section 405 of the NYSDOT Standard Specifications dated May 1, 2008, and all addenda shall apply except as modified herein.

405-02 MATERIALS.

405-2.02 Aggregates: Fine aggregate shall conform to Section 703-01, Fine Aggregate, except for gradation and except that approved limestone and slag screenings, may be used. Coarse aggregate shall conform to Section 703-02, Coarse Aggregate. Crushed stone, crushed gravel, or approved crushed slag may be used.

Aggregate, including mineral filler, shall meet the following gradation requirements:

Sieve Size	Type II General Surfacing Percent Passing	Type III Coarse Resurfacing Rut Filling Percent Passing	Stockpile Tolerance
3/8	100	100	
#4	90 - 100	70 - 90	±5%
#8	65 - 90	45 - 70	±5%
#16	45 - 70	28 - 50	±5%
#30	30 - 50	19 - 34	±5%
#50	18 - 30	12 - 25	±4%
#100	10 - 21	7 - 18	±3%
#200	5 - 15	5 - 15	±2%

The job mix gradation shall be within the gradation band for the desired type. After the job mix design is submitted and approved, then the percent passing each sieve size shall not vary by more than the stockpile tolerance and shall remain within the gradation band. The percent passing shall not go from the high end to the low end of the range for any two consecutive screens.

The mineral aggregate shall be placed in a stockpile at the job location or at some other approved location. If the tests show material to be out of gradation the contractor will be given the choice to either remove the material or blend other approved aggregate with the stockpile material to bring it into specification. Materials used in blending must meet the quality tests before blending and must be blended in a manner to produce a consistent gradation. **This may require a new mix design.**

Screening shall be required at the stockpile prior to the delivery of the mineral aggregate to the paving machine.

405-2.03 Water: The requirements of Section 712.01, Water, shall apply.

405-2.04 Mineral Filler. Mineral filler, if used, shall conform to the requirements of Section 703-08, Mineral Filler.

405-2.05 Polymer Modifier. The minimum amount and type of polymer modifier shall be based on the bitumen content and shall be determined by the laboratory performing the mix designs. The minimum polymer modifier content shall be three (3%) percent polymer solids, based on bitumen weight. Any deviations shall be approved by the Deputy Commissioner.

405-2.06 Additives. Additives may be added to the asphalt emulsion mix or any of the component materials to provide the control of the quickset properties and increase adhesion. These additive (s) must be part of the mix design and be compatible with other components of the mix.

405-2.07 Mix Design. At least seven (7) working days before the work commences the Contractor shall submit a written mix design to the Deputy Commissioner of Highways covering the specific materials to be used on the project. The mix design should be preformed by properly trained personnel in a laboratory approved by the Deputy Commissioner of Highways.

The Deputy Commissioner will approve all mix designs, all Micro-Surfacing material and design methods prior to use.

405-3 CONSTRUCTION REQUIREMENTS.

405-3.01 Preparation of Mixtures. The aggregate shall be introduced into the pugmill at a temperature to eliminate free moisture on the aggregate surface, but no greater than 175°F. for the liquid asphalts.

Preparation of the mixture shall conform to the specification requirements outlined in Section 401, Plant Mix Pavements -General, except that automatic proportioning and recording equipment is not required.

405-3.02 Inspection, Testing, & Acceptance. The Producer shall contact the having jurisdiction for his plant to arrange for a Department Inspector to inspect the preparation of mixtures. If inspection is not performed at the time of mixture preparation, samples from the stockpile shall be tested by the Department to determine the acceptability of the mixture prior to use for patching.

405-4 METHOD OF MEASUREMENT. The bituminous cold mix pavement shall be measured by the number of tons of compacted aggregate and bituminous material supplied **(F.O.B. Trucks)** in accordance with the specifications.

405-5 BASIS OF PAYMENT. The unit price bid per ton shall include the cost of furnishing all the aggregate, the mixing, delivery **(F.O.B. Trucks)** and all labor and equipment necessary to complete the work.

Payment will be made under:

Item No.	Item	Pay Unit
E405.01	Cold Mix Bituminous Pavement (Open Graded)(Standard Cold Patch Material)	Ton
E405.03	Cold Mix Bituminous Pavement (Open Graded)(Modified Stockpile Patching Materials)	Ton
E405.04	Cold Mix Bituminous Pavement (Open Graded)(Bituminous Patching Co-Line or Equal)	Ton

SECTION 407 – TACK COAT

Section 407 of the NYSDOT Standard Specifications dated May 1, 2008, and all addenda shall apply.

Payment will be made under:

Item No.	Item	Pay Unit
407.0102	Diluted Tack Coat	Gallon
407.0103	Straight Tack Coat	Gallon

SECTION E410 –BITUMINOUS SURFACE TREATMENT – SINGLE COURSE

Section 410 of the NYSDOT Standard Specifications dated May 1, 2008, and all addenda shall apply except as modified herein.

E410-1 DESCRIPTION. This is to be a heavy-duty protective coating for existing bituminous pavements to prevent surface oxidation of the pavement and to inhibit softening or erosion due to spillage or dripping of petroleum derivatives.

E410-2 MATERIALS. Section 410-2 of the NYSDOT Standard Specifications dated May 1, 2008, and all addenda shall apply.

E410-3 CONSTRUCTION DETAILS.

QUALITY ASSURANCE

Successful Bidder Shall:

1. Provide adequate number of skilled workmen who are trained and experienced in the necessary crafts.
2. Secure all necessary work permits.
3. Repair any damage that occurs during construction to existing utilities, paving, curbs or lawn to the owner's satisfaction at no cost to the owner.
4. Visit the work site to familiarize himself with the conditions prior to commencing work.

CHARACTERISTICS

Product Shall Be:

1. An asphalt emulsion based material specifically designed to be a pavement sealer.

2. Show little or no dissolution, softening or discoloration when subjected to kerosene, gasoline, anti-freeze, brake fluid, diesel fuel, de-icing chemicals, salts, or other petroleum derivatives or acids.

3. Thixotropic nature, and show no significant settlement of solids for a period of not less than three (3) months.

4. Capable of suspending a clean aggregate sand in the amount of 4 to 6 pounds per gallon with use of additives to provide extra traction for vehicular and pedestrian traffic.

5. Bond to the asphalt pavement surface and add a fresh coat of asphalt to the pavement surface.

6. Durable and resist traffic wear as well as protect the pavement from oxidation and water intrusion.

7. Latex additives consist of a combination of Allates Coatings P.TAS.

SECTION E410 –BITUMINOUS SURFACE TREATMENT – SINGLE COURSE

A product such as Seal Master, Inc.'s PetroSeal or an equivalent modified asphalt, (a modified latex emulsion) shall be used to seal small areas of asphalt contaminated with oil, grease, and gasoline prior to application of finish seal coats, to prevent "bleeding" of these contaminants through the finish seal coats and to promote adhesion of the asphalt emulsion over these areas. Drying time should be approximately 20-30 minutes.

MINERAL AGGREGATE

Shall be clean, hard durable, and free from deleterious matter such as clay, dirt, organic matter or mineral salts. Sands meeting the specifications as listed below shall be used. For best results "BLACK BEAUTY" brand sand or 30-60 sandblasting sands are recommended.

Sieve Designation	Percent Passing
#16	100
#30	15.85
#50	2.10
#100	0.2

PREPARATION OF PAVEMENT

1. Pavement surface -surface to be coated must be sound, surface cured and clean in order for asphalt emulsion slurry to perform properly.
2. Cleaned surface -to be clean, the pavement shall be free from clay, salt, sand, grease, dirt and other foreign matter. Cleaning shall be accomplished by means of power blowers, stiff bristle brooms, or by pressure water flushing. The Contracting Agency shall provide Cleaning and Traffic Control.
3. Areas contaminated with petroleum derivatives must be treated with a modified asphalt by contractor. If damage is severe the areas must be cut out and replaced by the municipality.
4. Any cracks larger than *1/4* inch shall be cleaned and filled with either hot or cold liquid type crack filler. Cracks in excess of *1/4* inch must be filled with hot liquid sealant and crack bedding material.
5. Temperature -Application temperature for material is 70 -100 degrees F
6. Application Rate -Apply sealer coat in smooth, uniform consistency according to the guidelines indicated in the following table:

	TT-55B (gal.)	Water (gal.)	Sand (#)	P.T.A.S. (gal.)	Application (gal./sq.yd.)
1st Coat	100	20	400	2-3	.15
2nd Coat	100	20	400	2-3	.10

NOTE: Sand slurry must be applied at a uniform rate and evenly distributed.

SECTION E410 –BITUMINOUS SURFACE TREATMENT – SINGLE COURSE

Each applied coat shall have sufficient time to dry before applying an additional coat. A minimum of 2-4 hours shall be allowed for drying. Documentation of material used on the project will be provided on a daily basis.

7. All equipment must be equipped with full sweep agitation or other mechanical means to assure proper mixing of material.
8. Ambient temperature -the sealer should be applied when the ambient temperature is 50 degrees and rising with no threat of rain for an 8-hour period. Do not apply to Damp or Moist pavement surfaces.

Any sealer that washes away or does not adhere must be replaced by the contractor at the contractor's expense.

9. Drying Time-the newly applied material must be allowed a minimum of 1 -2 hours of curing time prior to opening to traffic. The contractor shall be responsible for determining the adequacy of cure time.

PRICE ADJUSTMENT

Price adjustments shall apply as specified for Item 403 -Hot Mix Asphalt Concrete Pavement.

Price Adjustment =New Average FOB - Base Average FOB x Total % Asphalt ton
Terminal price Terminal Price

Type	% Asphalt	Fuel Allowance	Total % Asphalt
2	6	-----	6.00

Payment will be made under:

Item No.	Item	Pay Unit
E410.01	Bituminous Surface Treatment – Single Course (Asphalt Sealer) (Under 5,000 SY Two Coat)	Square Yard
E410.02	Bituminous Surface Treatment – Single Course (Asphalt Sealer) (5,000 to 10,000 SY Two Coat)	Square Yard
E410.03	Bituminous Surface Treatment – Single Course (Asphalt Sealer) (10,001 to 25,000 SY Two Coat)	Square Yard
E410.04	Bituminous Surface Treatment – Single Course (Asphalt Sealer) (Over 25,000 SY Two Coat)	Square Yard

Price Per Square Yard includes F.O.B to any point in Erie County

SECTION E410 –BITUMINOUS SURFACE TREATMENT – SINGLE COURSE

ITEM E410.10xx – MICRO-SURFACING

Description:

This work shall consist of the construction of a bituminous surface system consisting of a mixture of polymer modified asphalt emulsion mineral aggregate mineral filler, water and other additives, properly proportioned, mixed and spread on a paved surface in accordance with these specifications in substantial conformance with the limits established by the Engineer.

Price:

Material price quoted shall be F.O.B. the storage facility, **per ton.**

Payment:

Payment for Micro-Surfacing Types I, II, III and Rut Filling shall be made at the contract price per ton for the total tons of aggregate, mineral filler, and asphalt emulsion verified by the receiving agency used in the accepted portion of the work. An invoice shall be sent promptly by the vendor to the Engineer or the Municipal Agency (or any other entity authorized to purchase).

Price Additional to Haul and Apply with Contractor's Equipment:

The price quoted shall be F.O.B. per ton furnished, delivered, and applied at the locations indicated by the Contracting Agency. Micro - Surfacing shall be applied in accordance with NYSDOT's Standard Specifications and as per the attached material specification for Micro – Surfacing. Cleaning and preparing the existing pavement, erecting warning signs, and directing traffic will be the responsibility of the purchasing agency.

Total Allowable Petroleum:

The percentage of total allowable petroleum for each Micro – Surfacing items is as follows:

Item	Asphalt Percentage	Petroleum Allowance Percentage	Total Petroleum Allowance Percent
E410.1000	9.0	0	9.0
E410.1001	9.0	0	9.0
E410.1002	7.5	0	7.5
E410.1003	7.5	0	7.5
E410.1004	9.0	0	9.0
E410.1005	7.5	0	7.5

Price Adjustments:

SECTION E410 –BITUMINOUS SURFACE TREATMENT – SINGLE COURSE

Price adjustments will be based on NYSDOT asphalt index.

Material Requirements:

A) Bituminous Materials:

The bituminous material shall be obtained from a primary source/supplier that has been approved by the Director of Materials Bureau within the current calendar year, prior to the start of work. The bituminous material shall be a **Quick – Set Polymer Modified** CSS-1h emulsion Item 702-4501 and the cement mixing test will be waived for this emulsion. The polymer material will be milled or blended into the asphalt or into the emulsifier solution prior to the emulsification process.

B) Aggregates:

The mineral aggregate material shall be obtained from an approved source. The mineral aggregate used shall be of the type and specified for the particular use of the Micro-Surfacing.

Mineral aggregate shall consist of material conforming to the requirement of Section 703-01, Fine Aggregates. In Addition, the plus No. 30 sized material used in these mixes shall meet one of the following frictional requirements.

Plus No. 30 sized aggregates shall be crushed limestone having an acid insoluble residue content of not less than twenty (20%) percent, excluding particles of chert and similar siliceous rocks unless approved by the Deputy Commissioner of Highways.

Plus No. 30 sized aggregates shall be crushed sandstone, granite, chert, traprock, ore tailings or other similar non-carbonate materials.

Plus No. 30 sized aggregates shall be crushed dolomite.

Plus No. 30 sized aggregates shall be crushed gravel or blends of two or more of the following materials; crushed limestone, dolomite, sandstone, granite, chert, traprock, ore tailings or other similar materials.

These aggregates shall meet the following requirements:

Not less than forty (40%) percent (by weight adjustments to equivalent volumes for materials of different specific gravities) of the total plus No. 30 sized material shall be non-carbonate particles are defined as those having an acid insoluble residue content not less than eighty (80%) percent.

Blends of siliceous and non-siliceous limestone will not be permitted,

SECTION E410 –BITUMINOUS SURFACE TREATMENT – SINGLE COURSE

Aggregates for use in pavements having land AADT's of 4,000 or more:

Mineral aggregates shall consist of material conforming to the requirements of Section 703-01, Fine Aggregates. In Addition, the plus No. 30 sized material used in these mixes shall meet one of the following frictional requirements:

Plus No. 30 sized aggregates shall be crushed limestone having an acid insoluble residue content of not less than twenty (20%) percent, excluding particles of chert and similar siliceous rocks unless otherwise approved by the Deputy Commissioner of Highways.

Plus No. 30 sized aggregates shall be crushed sandstone, granite, chert, traprock, ore tailings or other similar non-carbonate materials.

Plus No. 30 sized aggregates shall be crushed dolomite. (excluding Wappinger dolomite as defined by the Department).

Plus No. 30 sized aggregates shall be crushed gravel or blends of two or more of the following materials; crushed limestone, dolomite (including Wappinger Dolomite as defined by the Department), sandstone, granite, chert, traprock, ore tailings or other similar materials. These aggregates shall meet the following requirements:

Not less than forty (40%) percent (by weight adjustments to equivalent volumes for materials of different specific gravities) of the total plus No. 30 sized material shall be non-carbonate. Non-carbonate particles are defined as those having an acid insoluble residue content not less than eighty (80%) percent.

Blends of siliceous and non-siliceous carbonate rocks will not be permitted.

When aggregates for Micro-Surfacing are from more than one source, they shall be proportioned and blended to provide a uniform mixture. The mineral aggregate selected shall have a sand equivalent quality of sixty five (65) minimum.

The mineral aggregate, including mineral filler, shall meet the following gradation requirements:

Sieve Size	Type II General Surfacing Percent Passing	Type III Coarse Resurfacing Rut Filling Percent Passing	Stockpile Tolerance
3/8	100	100	
#4	90 – 100	70 - 90	+/- 5%
#8	65 – 90	45 - 70	+/ 5%
#16	45 – 70	28 – 50	+/ 5%
#30	30 – 50	19 – 34	+/ 5%
#50	18 – 30	12 - 25	+/- 4%
#100	10 – 21	7 - 18	+/- 3%
#200	5 – 15	5 - 15	+/- 2%

The job mix gradation shall be within the gradation band for the desired type. After the job mix design is submitted and approved, then the percent passing each sieve size shall not vary by more than the stockpile tolerance and shall remain within the gradation band. The percent passing shall not go from the high end to the low end of the range for any two consecutive screens.

The mineral aggregate shall be placed in a stockpile at the job location or at some other approved location as described in the NYSDOT Materials Bureau M.M.5. If the tests show material to be out of gradation the contractor will be given the choice to either remove the material or blend other approved aggregate with the stockpile material to bring it into specification. Materials used in blending must meet the quality tests before blending and must be blended in a manner to produce a consistent gradation. **This may require a new mix design.**

Screening shall be required at the stockpile prior to the delivery of the mineral aggregate to the paving machine.

C) Water:

The requirements of Section 712.01, Water, shall apply.

D) Mineral Filler:

Mineral filler shall be o-air entrained Portland Cement or hydrated Lime meeting the requirements of Section 703-08, Mineral Filler. The type and amount of mineral filler needed shall be determined by a laboratory mix design and shall be considered as part of the mineral aggregate gradation requirement. An increase or decrease of less than one percent may be permitted by the Engineer as the Micro-Surfacing is being paved, for better consistency or set times.

E) Polymer Modifier:

The minimum amount and type of polymer modifier shall be based on the bitumen content and shall be determined by the laboratory performing the mix

designs. The minimum polymer modifier content shall be three (3%) percent polymer solids, based on bitumen weight. Any deviations shall be approved by the Deputy Commissioner.

A) **Additives:**

Additives may be added to the asphalt emulsion mix or any of the component materials to provide the control of the quickset properties and increase adhesion. These additive (s) must be part of the mix design and be compatible with other components of the mix.

Mix Design:

A) Mix Design:

At least seven (7) working days before the work commences the Contractor shall submit a written mix design to the Deputy Commissioner of Highways covering the specific materials to be used on the project. The mix design should be preformed by properly trained personnel in a laboratory approved by the Deputy Commissioner of Highways.

B) Mix Contents:

The mix design must clearly show the proportion of mineral aggregate, mineral filler (minimum & maximum), water (minimum & maximum),

C) Approval:

The Deputy Commissioner will approve all mix designs, all Micro-Surfacing material and design methods prior to use. The component materials shall be within the following limits.

Residual Asphalt:	Type II 6.5% to 9.0% by dry weight of aggregate Type III 5.5% to 7.5% by dry weight of aggregate Ring and Ball softening point shall be 135° F minimum.
Mineral Filler:	0% to 3% solids based on bitumen weight.
Polymer Based: Modifiers:	Minimum of 3% solids based on bitumen weight
Additive:	As needed
Water:	As required to produce proper mix consistency

D) Acceptability:

Minimum acceptable values for the trial mixes are as follows:

Property	Test Method	Requirements
Wet Cohesion	ISSA TB 139 30 Minutes ISSA TB 139 60 Minutes	12 kg-cm minimum
Wet Track Abrasion Loss	ISSA TB 100 1Hour Soak ISSA TB 100 six (6) day Soak	50 g/fr squared maximum 75 g/fr squared maximum
Mix Time	ISSA TB 113	Controllable to 120 seconds minimum
Classification Compatibility	ISSA TB 144	11 grade points minimum
Wet Stripping	ISSA TB 114	Pass (90% minimum)
Excess Asphalt by LWT Sand Adhesion	ISSA TB 109	50 g/fr squared maximum
Lateral Displacement	ISSA TB 147A	50% maximum
Specific Gravity after 1000 Cycles of 125 pounds	ISSA TB 147A	2.10 maximum

Equipment Requirements:

All equipment, tools and machines used in the performance of this work shall be the property of the Contractor, approved by the Commissioner and maintained in proper working condition at all time during the performance of this work.

A) Mixing Machines:

The mixing machines shall be specifically designed and manufactured to pave Micro-Surfacing. The material shall be mixed by an automatic sequenced, self-propelled Micro-Surfacing mixing machine, which shall be a continuous flow mixing unit, able to accurately deliver and proportion the mineral aggregate, emulsified asphalt, mineral filler, control setting additive and water to a revolving multi-blade twin shaft pug mill type mixer and discharge the mixed product in a continuous flow basis. The machine shall have sufficient storage capacity and water to maintain an adequate supply to the proportioning controls.

B) Proportioning Devices:

Individual volume or weight controls for proportioning each material to be added to the mix shall be provided and properly marked. These or similar devices are usually revolution counters or similar devices and are used in material calibration and determining the material output at any time.

C) Spreading Equipment:

The mixture shall be spread uniformly by means of a conventional augured surfacing spreader box attached to the mixer and equipped with paddles/augers

to agitate and spread the material evenly throughout the box. A front seal shall be provided to insure no loss of mixture at the road contact point. The rear seal shall act as final strike-off and shall be adjustable. The spreader box and rear strike-off shall be designed and operated so that a uniform consistency is achieved to produce a free flow of material to the rear strike-off. The rear strike-off shall have no joints or seams in its entire length. The spreader box shall have suitable means provided to side shift the box to compensate for variations in the pavement geometry. It also must be able to be adjusted from nine (9') feet to fifteen (15') feet without stopping the application process.

D) Calibration:

Each mixing unit to be used in performance of the work shall be calibrated in accordance with written instructions in the presence of the Commissioner prior to construction. No machine will be allowed to work on the project until the calibration has been completed and/or accepted.

Application:

A) Rate of Application:

The micro-Surfacing mixture shall be of proper consistency at all times so as to provide the application rate required by the plans.

When Type II Micro-Surfacing is required, the minimum rate of application shall be fifteen (15) pounds per square yard for a single application, and a minimum rate of application shall be twenty-five (25) pounds per square yard for a double application.

When Type III Micro-Surfacing is required, the minimum rate application shall be twenty-five (25) pounds per square yard for a single application, and a minimum rate of thirty-five pounds per square yard for a double application.

When Rut Filling is required Type III Micro-Surfacing shall be paved at the rate approved by the Commissioner to fill the wheel rut as detailed on the plans.

B) Application:

The surface may be pre-wetted with water by fogging ahead of the spreader box. The rate of application of the fog spray shall be adjusted during the day to suit temperature, surface texture, humidity, and dryness of pavement. The pavement surface shall be damp without any free flowing water ahead of the spreader box.

The Micro-Surfacing shall be of the desired consistency upon leaving the mixer. A sufficient amount of material shall be carried in all parts of the spreader box at all times so that a complete coverage is obtained. Overloading of the spreader box shall be avoided. No lumping, bailing, or unmixed aggregate shall be permitted.

No streaks, such as those caused by oversized aggregate, will be left in the finished surface. If excess oversize develops, the job will be stopped until the Contractor proves to the Commissioner that the situation has been corrected.

No excess buildup, uncovered areas, or unsightly appearance will be permitted on longitudinal or transverse joints. The Contractor shall provide suitable width spreading equipment to produce a minimum number of longitudinal joints throughout the project. When possible, longitudinal joints shall be placed in proximity to lane markings. Half passes and odd width passes will be used only in minimum amounts. If half passes are used, they shall not be the last pass of any paved area.

A differential of not greater than a ¼" along the transverse joints will be permitted, when measured with a ten (10') foot straight edge centered on the joint parallel to the traffic flow.

The Contractor shall protect and cover all utility structures and catch basins during the application of the Micro-Surfacing that are within the areas to be paved. These same protective coverings shall be removed upon completion of the project.

The Micro-Surfacing shall possess sufficient stability so that premature breaking of the material in the spreader box does not occur. The mixture shall be homogeneous during and following mixing and placing. It shall be free of excess water or emulsion and free of segregation of the aggregate fines from the coarser aggregate.

The areas which cannot be reached, with the mixing machine shall be surfaced using hand squeegees to provide complete and uniform coverage. If necessary the area to be hand worked shall be lightly dampened prior to mix placement. Care shall be exercised to leave no unsightly appearance from the hand- work. The same type of finish as applied by the spreader box shall be applied. Handwork shall be completed during the machine application.

Care should be taken to insure straight lines along curbs and shoulders. No run off on these areas will be permitted. Lines at intersections will be kept straight to provide a good appearance. The Contractor shall remove any excess material in areas such as driveways, gutters, and intersections, as specified by the Commissioner. The Contractor shall, on

a daily basis, remove any debris associated with the performance of work.

Curing:

Traffic Control shall be provided by the purchasing agency, unless specifically requested and provided for on the bid form, to protect the Micro-Surfacing until the mixture has cured sufficiently to prevent damage from traffic. It is the vendor's responsibility to inform the purchasing agency's representative when traffic may be permitted on the completed Micro-Surfacing. Any damage by allowing traffic on the Micro-Surfacing prematurely shall be repaired by the Contractor, to the satisfaction of the Commissioner, at no additional cost to the purchasing agency.

Testing:

The Contractor shall sample, test and supply test results to the Commissioner on samples of Micro-Surfacing mixture taken from the project. The samples shall be representative. The testing shall be performed by properly trained personnel in a laboratory approved by the Commissioner. The following tests shall be preformed on representative mix samples.

Aggregate Gradation	NYSDOT Materials Bureau MM5
Asphalt Content	NYSDOT Materials Bureau MM5

A minimum of three samples shall be tested at the start of the project. Each day, during routine production, two samples shall be taken. One of these daily samples shall be tested and the remaining sample shall be retained until the acceptance of the project. Test results shall be made available to the Commissioner within three (3) days. If conditions warrant, the Commissioner may stop work until the required test results become available.

ITEM E410.1006 - MICRO TEKK

1. DESCRIPTION

The micro-surfacing surface shall consist of a mixture of polymer modified asphalt emulsion, mineral aggregate, mineral filler, additives and water; and it shall be properly proportioned, mixed and spread on an existing surface in accordance with plans, specifications, and as ordered by the Engineer. The references are made herein to New York State Department of Transportation, Standard Specifications, Construction and Materials.

2. MATERIALS

2.1 Bituminous Materials

2.1.1 Bituminous material approval

The bituminous material shall be obtained from a storage facility that has been approved by the Director, Materials Bureau within the current calendar year, prior to the start of work.

2.1.2 Bituminous material selection

The bituminous material shall be a polymer modified asphalt emulsion meeting the following specification for MSE (Micro-Surfacing Emulsion) and intended for use in the micro-surfacing system.

SPECIFICATION FOR MICRO-SURFACING EMULSION (MSE)

	MIN	MAX
Viscosity, Saybolt Furol @ 77 F,sec.	20	100
Storage Stability Test, 1 day		1.0
Particle Charge	positive	
Sieve, %		0.1
Residue by distillation, %	62	
Mixing Test (a)		
Break Time (sec)	40	120
Set Time (min)	10	
Set/cure direction	Bottom to Top	
Cohesion (min kg/cm @ 60 mins.)	20	
% Polymer (b)	3.0	
Test on Residue from Distillation @ 350 F (c)		
Penetration, 77 F, 100g, 5 sec	40	80
Ductility , 77 F 5 cm/min, cm	60	
Absolute Viscosity @ 140 F-poise	8000	
Solubility in Trichlorethylene	97.5	
Softening point, Ring & Ball, F	140	

Notes: a, b, & c additional

(a) All mixing tests shall be performed using approved job aggregate and materials.

(b) Polymers shall not be post-added to the finished emulsion. All polymers shall be incorporated, during the milling process, at the producer's manufacturing facility.

(c) AASHTO T 59 modified to maintain a 350 F +/- 10 F maximum temperature for 15 minutes.

2.2. Aggregates

2.2.1. Aggregate Approval

The aggregates for micro-surfacing shall conform to the requirements of NYS Standard Specifications Section 703.01 "Fine Aggregate", 703.02 "Coarse Aggregate" and 703-08 "Mineral Filler" and be from an approved source. The Aggregate shall be manufactured crushed stone such as granite, slag, limestone, chert or other high quality aggregate or combination thereof. Aggregate blend shall be greater than 20% acid insoluble when tested in accordance with NYSDOT Materials Method 28 for surface courses.

2.2.2. Aggregate Selection

All aggregates should meet requirements of NYSDOT Standard Specification Section 203. The mineral aggregate used shall be of the type and gradation specified for microsurfacing. (see section 2.7)

2.2.3. Aggregate Physical Properties

a. The aggregate selected shall have a minimum sand equivalent value of 65 when tested by ASTM D-2419.
b. The aggregate shall have a weighted loss of not more than 20% using the magnesium sulfate test.
c. The aggregate wear, from resistance to abrasion, shall be a maximum of 35% when tested by ASTM C-131.
d. The aggregate shall have a maximum methylene blue value of 15.

2.3. Mineral Filler

Mineral filler shall be added to the mineral aggregate and may be any recognized brand of non-airentrained type I or II Portland cement or hydrated lime that is free of lumps or other irregularities or any other approved mineral additive. It may be accepted upon visual inspection. The amount of mineral additive needed shall be determined by the laboratory mix design and will be considered as part of the material gradation requirements.

2.4. Water

The water shall be potable and shall be free of harmful soluble salts.

2.5. Polymer Modifier

A minimum of 3.0% polymer solids content based on bitumen weight content, certified from the emulsion supplier, along with special quick-setting emulsifier agents shall be milled into the asphalt emulsion during manufacture. The emulsified asphalt shall be so formulated that when the paving mixture is applied at a thickness of one inch and the ambient air temperature of at least 75 degrees F. the material will cure sufficiently so that rolling traffic can be allowed in one hour with no damage to the surface, as verified by the Engineer.

2.6 Additives

These are materials that are added to the emulsion/aggregate mix to provide the specified quickset properties. The additives shall be supplied and certified by the emulsion manufacturer as being compatible with the emulsion and the mixture and included as part of the mix design.

2.7 Micro-Surfacing Mixture Components

The micro-surfacing mixture shall conform to the following limits. Gradation: ASTM C136-05 or AASHTO T 27=06 and AASHTO T-11 Materials finer than no.200 sieve.

Screen Size	Micro Type II % Passing *	Micro Type III % Passing *
3/8"	100	100
#4	90-100	70-90
#8	65-90	45-70
#16	45-70	28-50
#30	30-50	19-34
#50	18-30	12-25
#100	10-21	7-20
#200	5-20*	5-20*

*Determined by AASHTO T-27 or equivalent.

Residual Asphalt	5.5% to 10.5% by dry weight of aggregate
Mineral Additive	0% to 3% by dry weight of aggregate
Polymer Modifier	Minimum 3% by weight
Field Control Additive	as required to provide the specified properties
Water	As required to produce consistency
Mixture Performance Additive	As required by the mix design.

* The percent of aggregate passing shall not go from the high end to the low end of the specified range on any two successive sieves.

2.8. Suggested Application and Rate:

Scratch Course: As required to true and level:

Type II -Urban and Residential Streets: (20+/-4 lbs. per sq yd per lift)

Type III-Primary and Interstate Routes: (30 +/- lbs. per sq yd per lift)

Wheel Ruts: Application rates as required.

3. MICRO-SURFACING MIX DESIGN

The Contractor shall be responsible for selecting an asphalt emulsion and aggregate within the specification limits which are compatible and capable of being combined to provide a micro-paving mixture which will be homogeneous, fill cracks and voids, adhere firmly to the existing pavement surface and be resistant to abrasion from traffic.

Prior to beginning work, the Contractor shall submit the names of sources and suppliers of all materials to be used to the Engineer for review and approval by the Regional Materials Engineer.

Samples of these materials shall be obtained by the Contractor and tested at the Contractor's expense in a laboratory approved by the Buyers Engineer to determine their conformance to the Materials Requirements noted above.

3.1. Mix Design

Before work commences, the Contractors shall submit a certified mix design covering the specific materials to be used on the project. A qualified laboratory shall perform this design. Once the materials are approved, no substitution will be permitted unless first tested and approved by the laboratory preparing the mix design and the Buyers Engineer.

The qualified laboratory shall develop the job mix design and present certified test results for the contractor's approval. Compatibility of the aggregate and emulsion shall be verified by the mix design. The mix design shall meet current NYSDOT specifications. All component materials used in the mix design shall be representative of the material proposed by the contractor for use on the project.

Table 3.1.1
Mix Design Properties

Property	Test Method	Requirement
Break Time Set Time Set/Cure Direction		40-120 seconds 10 Minutes Maximum Bottom to top
Wet Cohesion	ISSA TB 139; 30 minutes ISSA TB 139; 60 minutes	12 kg-cm, minimum 20 kg-cm, minimum
Wet Track Abrasion Loss	ISSA TB 100; 1 hour soak ISSA TB 100; 6 day soak	538 g/m2, maximum 807 g/m2, maximum
Mix Time	ISSA TB 113	Controllable to 120 sec., min.
Classification Compatibility	ISSA TB 144	11 grade points, minimum
Wet Stripping	ISSA TB 114	Pass (90.0% minimum)
Excess Asphalt by LWT Sand Adhesion	ISSA TB 109	538 g/m2 maximum
Lateral Displacement Vertical Displacement Specific Gravity after 1000 cycles of 125 lbs.	ISSA TB 147	7.5% maximum 15% maximum 2.10 maximum
Flexural Tension Test	ISSA TB 146	Min. 30 cm travel distance
Overlay Test @5C, 90% or less of Ultimate Load at 100 cycles, Specimen Size:(H=0.5”, L=6”, W=3”), Loading cycles=60 seconds, Displacement=0.05”	Tex-248-F	

3.2. Reporting

A complete laboratory analysis and report accompanied by samples of the components and abraded and unabraided micro-surfacing test samples shall be submitted to and approved by the Buyers Engineer prior to beginning work. The report shall include the following minimum data:

1. Sieve analysis for aggregate (AASHTO T-27 and T-11).
2. Sand Equivalency test value (ASTM D2419).
3. Methylene blue value- as needed
4. Percentage of mineral filler used.
5. Percentage of additive used.
6. Grade of asphalt emulsion and percentage of asphalt residue in emulsion.
7. Percentages of asphalt emulsion, water, cement and additive in system.
8. Results from the break time, set time, set cure direction, cohesion, and Schulze Breuer tests. (see table 3.1.1)

4. <u>EQUIPMENT</u>

4.1. General

All equipment, tools, and machines used in the performance of this work shall be maintained in satisfactory working condition at all times to ensure a high quality product. All micro-surfacing mixing and spreading equipment shall be approved by the Engineer prior to beginning work.

4.2 Mixing Equipment

The material shall be mixed by a self-propelled or truck mounted micro-surfacing mixing machine which shall be a continuous flow mixing unit able to accurately deliver and proportion the aggregate, emulsified asphalt, mineral and field control additives, and water to a revolving multi-blade twin shafted mixer and discharge the mixed product on a continuous flow bases. The machine shall have sufficient storage capacity for aggregate, emulsified asphalt, mineral and field control additives, and water to maintain an adequate supply to the proportioning controls. The machine shall be equipped with self-loading devices, which provide for the loading of materials while continuing to lay micro-surfacing, thereby minimizing construction joints. When truck mounted machines are used, a minimum of two (2) machines shall be provided to maintain continuity of the project. The mixing machine shall be equipped with a water pressure system and fog spray bar, which can completely fog spray the existing surface prior to placing the slurry. During the spraying process, water puddles will not be permitted. Use Micro-Surfacing equipment appearing on the NYS DOT approved list.

4.3. Proportioning Devices

Individual volume or weight controls for proportioning each material to be added to the mix, i.e., aggregate, emulsified asphalt, mineral and field control additives, and water shall be provided and properly marked. These proportioning devices are usually revolution counters or similar devices and are used in material calibration and determining the materials output at any time. These proportioning devices shall be calibrated within the current calendar year. Quantities in pounds of the mixture performance additive shall be recorded during calibration. The field components shall be sampled during calibration. The materials shall then be sent to an approved lab for re-blending to verify conformance to ISSA TB-147 and TEX-248-F.

4.4. Emulsion Pump

The emulsion pump shall be a heated positive displacement type.

4.5 Spreading Equipment

The surfacing mixture shall be spread uniformly by means of a mechanical type spreader box attached to the mixer, equipped with paddles to agitate and spread the materials throughout the box. The spreader box shall have the ability to extend from nine (9) feet to fifteen (15) feet in width without stopping the Microsurfacing operation. A front seal shall be provided to insure no loss of the mixture at the road contact point. The rear seal shall act as final strike off and shall be adjustable. The

mixture shall be spread to fill cracks and minor surface irregularities and leave a uniform skid-resistant application of material on the surface. The spreader box and rear strike off shall be so designed and operated that a uniform consistency is achieved to produce a free flow of material to the rear stride off. The longitudinal joint where two passes join shall be neat appearing, uniform and lapped. All excess material shall be removed from the job site prior to opening the road. The spreader box shall have suitable means provided to side shift the box to compensate for variations in pavement width and longitudinal alignment. The spreader box shall be kept clean and buildup of emulsion and aggregate on the box will not be permitted.

4.6 Machine Calibration

Previous calibration documentation, for each mixing unit, covering the exact materials to be used shall be acceptable provided they were made during the current calendar year. The documentation shall include the individual calibration of each material at various settings, which can be related to the machine metering devices.

5. CONSTRUCTION DETAILS

5.1 Weather Limitations

The micro-surfacing shall not be placed in the rain or when rain is threatening and shall not be placed if either the pavement or air temperature if 50 F and falling, and there is no forecast of temperatures below 32 F within 24 hours from the time of placement of the mixture. The Contractor shall be responsible for constructing and curing the microsurfacing under proper weather conditions. The Contractor at his/her expense shall replace any areas of microsurfacing that do not cure within a period acceptable to the Engineer. Microsurfacing shall be placed only during the period of May 1 up to and including the last Saturday of September.

5.2 Preparation of Surface

Immediately prior to applying microsurfacing, the surface shall be cleaned of all loose materials, silt spots, vegetation, and other objectionable materials. Any standard cleaning method used to clean pavements will be acceptable, except water flushing will not be permitted in areas where considerable cracks are present in the surface. The Engineer will determine cleanliness of the surface at the time of placement.

Manhole covers, drop inlets, catch basins, curbs and other structures within the area shall be protected against the application of micro-surfacing materials.

If required by the Engineer or plans, crack sealing will be done prior to the application of the micro-surface as detailed in Section 663. Crack filling will be paid under its appropriate item.

5.3 Tack Coat

If required by the plans, the Contractor shall apply a tack coat consisting of one part emulsified asphalt and one part emulsifier solution with a distributor at .05-.15 gallons per square yard. The tack coat shall meet the requirements of 702-90. A tack coat shall always be applied to a concrete or brick surface.

5.4 Application:

The Contractor shall stockpile aggregates in an area that is free draining and shall be kept free from contamination by unsuitable materials and excessive moisture. Segregation of aggregate particle sizes in the stockpiles will not be permitted. All aggregate shall be screened just prior to loading for job site delivery.

The amount of asphalt emulsion to be blended with the aggregate shall be that as determined by the laboratory report after final adjustment in the field. Water shall be added as necessary to obtain a fluid and homogeneous mixture. The Engineer will approve the final rate of application.

The surface should be pre-wetted by fogging ahead of the spreader box when required by local conditions. The rate of application of the fog spray shall be adjusted during the day to suit temperatures, surface texture, humidity, and dryness of the pavement surface.
A sufficient amount of micro-surface mixture shall be carried in all parts of the spreader at all times so that a complete coverage is obtained.

No lumping, balling or unmixed aggregate will be permitted. No segregation of the emulsion and aggregate will be permitted. If the coarse aggregate settles to the bottom of the mix, the micro-surface shall be removed from the pavement. No excessive breaking of the emulsion will be allowed in the spreader box. No streaks such as caused by oversized aggregate shall be left in the finished pavement.

Every effort shall be made to prevent the micro-surface from spilling onto the adjacent pavement or curbs. Should spillage occur, it shall be cleaned to the satisfaction of the Engineer.

During production, the actual percentage of asphalt residue shall not vary by more than 1% of that indicated in the approved mix and must remain within the general limits.

5.5 Test Strips

Test strip, if requested, shall be placed prior to commencing the project to ensure that the equipment is properly calibrated and that the mixture has the indicated properties of the approved mix design. The test strips shall be provided as required by the Engineer in or near the work site and shall be representative of the traffic and pavement conditions of the project.

The finished micro-surfacing mixture shall accept rolling traffic within one (1) hour for all applications.

For rut fill applications the contractor may remove 1-1/2" of material a minimum of three (3) feet wide by grinding for a test section.

5.6 Workmanship

No excessive buildup, uncovered areas or unsightly appearances shall be permitted on longitudinal or transverse joints. The contractor shall provide suitable width spreading equipment to produce a minimum number of longitudinal joints throughout the project. When possible, longitudinal joints shall be placed on lane lines. Half passes and odd widths passes will be used only in minimum amounts. If half passes are used, they shall not be the last pass of any paved area.

The micro-surfacing mixture shall possess sufficient stability so that premature breaking of the material in the spreader box does not occur. The mixture shall be homogeneous during and following mixing and spreading. It shall be free of excess water or emulsion and free of segregation of the emulsion and aggregate fines from the coarser aggregate.

Areas, which cannot be reached with the mixing machine, shall be surfaced using hand squeegees to provide complete and uniform coverage. The area to be hand worked shall be lightly dampened prior to mix placement. Care shall be exercised to leave no unsightly appearance from handwork.

The same type finish as applied by the spreader box shall be required. Handwork shall be completed at the time of the machine applying process.

Care shall be taken to insure straight lines along curbs and shoulders. No runoff on these areas will be permitted. Lines at intersections will be kept straight to provide a good appearance.

If required by the plans, specified areas shall be rolled by a self-propelled 10-ton pneumatic roller with a tire pressure of 50 PSI and equipped with a water spray system.

6. <u>QUALITY CONTROL</u>

6.1 Materials

The Contractor will permit the Engineer to take samples of the aggregate and asphalt emulsion to be used in the project at the Engineer's discretion. Gradation and sand equivalent tests may be run on the aggregate and residual asphalt content test on the emulsion. Test results will be compared to specifications.

Tests will be run by a qualified laboratory at the expense of the buyer. The buyer must notify the contractor immediately if any test failed to meet the specifications.

6.2 Micro-Surfacing Mixture

Samples of the mixture will be taken daily and will be taken directly from the mixing unit(s). Consistency and residual asphalt content test will be made on the samples and compared to the mix design and specifications. The Engineer will notify the Contractor immediately if any test fails to meet specifications and the job will cease until corrective action is taken.
The Engineer may use the recorders and measuring facilities of the unit to determine application rates, asphalt emulsion content, mineral and field control additives, and water.

6.3 Non-Compliance

If any two successive tests fail on the stockpile material, the job shall be stopped. It is the responsibility of the Contractor, at his own expense, to prove the Engineer that the conditions have been corrected. If any two successive tests on the mix from the same machine fail, the use of the machine shall be suspended. It will be the responsibility of the Contractor, at his own expense, to prove the Engineer that the machine is working properly.

7. SUBMITTAL

Bidder shall at the time of the bid submit the following:

1. Bidder Qualifications page 8-16.
2. Sample of specifications, emulsion and aggregate.
3. Certified letter attesting that these are materials intended for use on bid project.

PERFORMANCE WARRANTY

The Contractor must furnish the following warranty after completion of the work and prior to final payment:

The Contractor hereby warrants that all workmanship and all materials furnished under the Contract comply fully with requirements of these Micro-Surfacing Specifications. If at any time within two years after the date of the final inspection, any unfaithful or defective work should appear, which in the opinion of the Engineer is due to inferior materials or workmanship, the Contractor warrants to do whatever is necessary to remedy the defects immediately without cost to the Buyer. The Engineer will notify the Contractor in writing of the defects and the repairs to be made, and the Contractor will begin repairs within a mutually agreed time frame.

9. METHOD OF MEASUREMENT

The quantity of microsurfacing used shall be measured by the proportioning devices on the microsurfacing machine, which shall be calibrated as stated in Section 4.3.

10. BASIS OF PAYMENT

The accepted quantity of mixture used in the "Micro-Surfacing" will be paid for at the contract unit price per ton for the type material specified. The unit price shown in the contract shall be full compensation for all materials; including emulsion, modifiers, mineral additives, labor, tools, equipment, traffic control, and all other incidentals necessary to complete the work.

Item No.	Item	Pay Unit
---.01	Micro-Surfacing Type II Surface	Ton
---.02	Micro-Surfacing Type III Surface	Ton
---.03	Micro-Surfacing Rut Fill	Ton

BIDDER QUALIFICATIONS

No bid will be considered unless the firm submitting the bid meets the following conditions:

1. Has in operation, company owned and maintained or rented/leased equipment operated by properly trained staff, including supervision and labor, capable of successfully performing the work described in the proposal and specification.

2. Has been engaged in the type of work described in the proposal and specification for a period of two (2) years unless a subsequent investigation by the Department indicates that the successful bidder's firm is, in fact, reputable in its field and capable of satisfactorily completing the contract.

3. The bidder must submit to the Engineer acceptable skid resistant values of previous jobs demonstrating the ability to maintain skid resistance after a minimum of one (1) year.

Bidders Note: Materials bid from other than approved NYSDOT storage facilities will not be considered for award and will be sufficient cause for rejection of bid.

Payment will be made under:

Item No.	**Item**	**Pay Unit**
E410.1000	Micro-Surfacing (Under 4,000 ADT) Type I	Ton
E410.1001	Micro-Surfacing (Under 4,000 ADT) Type II	Ton
E410.1002	Micro-Surfacing (Under 4,000 ADT) Type III	Ton
E410.1003	Micro-Surfacing Rut Filling	Ton
E410.1004	Micro-Surfacing (Over 4,000 ADT) Type II	Ton
E410.1005	Micro-Surfacing (Over 4,000 ADT) Type II	Ton
E410.1006	Micro-Surfacing (Over 4,000 ADT) Fiber Added	Ton

Item No.	Item	Pay Unit
E410.1007	Transport, deliver, and apply with Contractor Equipment Under 25 ton per day	Ton per Day
E410.1008	Transport, deliver, and apply with Contractor Equipment 26 to 100 ton per day	Ton per Day
E410.1009	Transport, deliver, and apply with Contractor Equipment 101 to 300 ton per day	Ton per Day
E410.10010	Transport, deliver, and apply with Contractor Equipment 301 to 500 ton per day	Ton per Day
E410.10011	Maintenance and Protection of Traffic	SY

SECTION E490 - COLD MILLING

Section 490 of the NYSDOT Standard Specifications dated May 1, 2008, and all addenda shall apply except as modified herein.

490-2 MATERIALS

490-2.02 Disposal of Material. Material removed during the milling process, including foreign debris within or on the pavement, shall follow the following guidelines:

Option A – All milled material shall be loaded onto the Owner's Vehicle.

Option B – All milled material shall be loaded onto the contractor's trucks and shall become the property of the contractor.

Option C – All milled material shall be loaded onto the contractor's trucks and shall become property of the contractor. All loose material shall be swept up by the contractor with a mechanical broom. All pavement areas along curbs, manholes, drop inlets, etc. is the responsibility of the municipality.

Option D – All milled material shall be loaded onto the contractor's trucks and shall become property of the contractor. All loose material shall be swept up by the contractor with a mechanical broom. All pavement areas along curbs, manholes, drop inlets, etc. is the responsibility of the contractor.

490-3 CONSTRUCTION DETAILS.

490-3.05 Loading Options.

A. All milled material shall be loaded onto the Owner's Vehicle.
B. All milled material shall be loaded onto the contractor's trucks and shall become the property of the contractor.
C. All milled material shall be loaded onto the contractor's trucks and shall become property of the contractor. All loose material shall be swept up by the contractor with a mechanical broom. All pavement areas along curbs, manholes, drop inlets, etc. is the responsibility of the municipality.
D. All milled material shall be loaded onto the contractor's trucks and shall become property of the contractor. All loose material shall be swept up by the contractor with a mechanical broom. All pavement areas along curbs, manholes, drop inlets, etc. is the responsibility of the contractor.

490-3.06 Responsibilities.

Municipality is responsible to:

- Provide maintenance and protection of traffic.
- Locate, mark and be responsible for all utilities located within the right-of-way to be removed.
- Supply all water necessary for the operation.

Contractor is responsible to:

- Provide equipment specified with all necessary teeth, fuel, and two (2) skilled and experienced operators.

490-5 BASIS OF PAYMENT:

The unit price bid per square yard shall include the cost of furnishing two (2) skilled and experienced operators and equipment necessary to complete the milling, including the removal of pavement by other means, the removal and disposal of milled material, the removal and hauling of milled material to a designated storage area when indicated in the contract documents and cleaning the resultant surface after milling. No payment will be made for additional cleaning that may be necessary just prior to placement of any overlaying pavement courses or tack coats. The cost of providing tack coats, overlay courses, and temporary pavement wedges around drainage structures, manholes, valve boxes, bridge abutments and beginning and ends of milled pavement shall be paid for separately.

Payment will be made under:

Item No.	Item	Pay Unit
E490.1001	Production Cold Milling of Bituminous Concrete Option A – Under 2,000 SY at 1” – 4” depth	SY
E490.1002	Production Cold Milling of Bituminous Concrete Option A – Under 2,000 SY, each additional 1” over 4”	SY
E490.1003	Production Cold Milling of Bituminous Concrete Option A – 2,000 – 4,000 SY at 1” – 4” depth	SY
E490.1004	Production Cold Milling of Bituminous Concrete Option A – 2,000 – 4,000 SY, each additional 1” over 4”	SY
E490.1005	Production Cold Milling of Bituminous Concrete Option A – Over 4,000 SY at 1” – 4” depth	SY
E490.1006	Production Cold Milling of Bituminous Concrete Option A – Over 4,000 SY, each additional 1” over 4”	SY
E490.1007	Production Cold Milling of Bituminous Concrete Option B – Under 2,000 SY at 1” – 4” depth	SY
E490.1008	Production Cold Milling of Bituminous Concrete Option B – Under 2,000 SY, each additional 1” over 4”	SY
E490.1009	Production Cold Milling of Bituminous Concrete Option B – 2,000 – 4,000 SY at 1” – 4” depth	SY
E490.1010	Production Cold Milling of Bituminous Concrete Option B – 2,000 – 4,000 SY, each additional 1” over 4”	SY
E490.1011	Production Cold Milling of Bituminous Concrete Option B – Over 4,000 SY at 1” – 4” depth	SY
E490.1012	Production Cold Milling of Bituminous Concrete Option B – Over 4,000 SY, each additional 1” over 4”	SY
E490.1013	Production Cold Milling of Bituminous Concrete Option C – Under 2,000 SY at 1” – 4” depth	SY
E490.1014	Production Cold Milling of Bituminous Concrete Option C – Under 2,000 SY, each additional 1” over 4”	SY
E490.1015	Production Cold Milling of Bituminous Concrete Option C – 2,000 – 4,000 SY at 1” – 4” depth	SY

SECTION E490 - COLD MILLING

Item No.	Item	Pay Unit
E490.1016	Production Cold Milling of Bituminous Concrete Option C – 2,000 – 4,000 SY, each additional 1” over 4”	SY
E490.1017	Production Cold Milling of Bituminous Concrete Option C – Over 4,000 SY at 1” – 4” depth	SY
E490.1018	Production Cold Milling of Bituminous Concrete Option C – Over 4,000 SY, each additional 1” over 4”	SY
E490.1019	Production Cold Milling of Bituminous Concrete Option D – Under 2,000 SY at 1” – 4” depth	SY
E490.1020	Production Cold Milling of Bituminous Concrete Option D – Under 2,000 SY, each additional 1” over 4”	SY
E490.1021	Production Cold Milling of Bituminous Concrete Option D – 2,000 – 4,000 SY at 1” – 4” depth	SY
E490.1022	Production Cold Milling of Bituminous Concrete Option D – 2,000 – 4,000 SY, each additional 1” over 4”	SY
E490.1023	Production Cold Milling of Bituminous Concrete Option D – Over 4,000 SY at 1” – 4” depth	SY
E490.1024	Production Cold Milling of Bituminous Concrete Option D – Over 4,000 SY, each additional 1” over 4”	SY
E490.3001	Miscellaneous Cold Milling of Bituminous Concrete Under 7,000 SY at 0” – 5” depth (4’ wide)	SY
E490.3002	Miscellaneous Cold Milling of Bituminous Concrete Under 7,000 SY at 5” – 10” depth (4’ wide)	SY
E490.3003	Miscellaneous Cold Milling of Bituminous Concrete 7,000 -14,000 SY at 0” – 5” depth (4’ wide)	SY
E490.3004	Miscellaneous Cold Milling of Bituminous Concrete 7,000 -14,000 SY at 5” – 10” depth (4’ wide)	SY
E490.3005	Miscellaneous Cold Milling of Bituminous Concrete Over 14,000 SY at 0” – 5” depth (4’ wide)	SY
E490.3006	Miscellaneous Cold Milling of Bituminous Concrete Over 14,000 SY at 5” – 10” depth (4’ wide)	SY
E490.3007	Miscellaneous Cold Milling of Bituminous Concrete Under 12,000 SY at 0” – 5” depth (7’ wide)	SY
E490.3008	Miscellaneous Cold Milling of Bituminous Concrete Under 12,000 SY at 5” – 10” depth (7’ wide)	SY
E490.3009	Miscellaneous Cold Milling of Bituminous Concrete 12,000 -24,000 SY at 0” – 5” depth (7’ wide)	SY
E490.3010	Miscellaneous Cold Milling of Bituminous Concrete 12,000 -24,000 SY at 5” – 10” depth (7’ wide)	SY
E490.3011	Miscellaneous Cold Milling of Bituminous Concrete Over 24,000 SY at 0” – 5” depth (7’ wide)	SY
E490.3012	Miscellaneous Cold Milling of Bituminous Concrete Over 24,000 SY at 5” – 10” depth (7’ wide)	SY

SECTION E490 - COLD MILLING

Item E490.70 COLD MICRO -MILLING

DESCRIPTION. This work shall consist of the milling, shaping and removal of portions of existing surfaces by a cold micro-milling process, utilizing equipment and procedures meeting the requirements in this specification. The work shall consist of production cold micro-milling of Hot Mix Asphalt (HMA) pavement.

Equipment. The micro-milling machine shall be capable of removing travel lanes, including ramps, using a minimum of 12-foot wide milling drum. Milling shall be performed using a down cut drum. The contractor shall be knowledgeable of equipment capabilities and is advised that the texture specified may not be obtainable at high production speeds. The drum shall have maximum tooth spacing of 0.20 inches (5 mm) and have a minimum of 3 wraps of teeth. The carbide cutting teeth shall be uniform in diameter with a uniform length, with a ±0.02 inch tolerance. The tooth holder blocks shall be uniform and not cause variations in the cut radius greater than ±0.02 inches . Small areas, tapered lanes, etc., may be milled by a smaller machine acceptable to the Engineer.

Construction Details. The advancing ground speed of the milling operations shall be a function of the RPMs of the milling drum such that the full uniform texture pattern is achieved. The speed of milling operations, in feet per minute, shall be limited to 2/3 times the drum RPMs. Any proposal to advance faster that this speed shall be discussed with the Engineer and proven on the test strip, and result in no repeated inconsistencies in texture during production milling. If these inconsistencies are present, the machine speed will be reduced to the recommended speed as stated above.

The milled area shall include the left lane/shoulder joint, the right lane/shoulder joint and everything in between. The cut shall be no deeper than ¾" or ½ the thickness of the existing overlay, whichever is less. It shall also be no deeper than necessary to texture the low points of wheel ruts.

The entire surface shall be textured, and the surface shall be substantially free from waves or irregularities, and shall not vary from a 10-foot straight edge by more than 1/8 inch. There can be occasional exceptions as determined by the engineer where the bottom of a wheel path and other low point defects may not be textured in order to maintain acceptable profile. The texture produced for the finished pavement shall be a uniform surface with longitudinal striations.

On the first day of milling, the texture and consistency of profile and cross slope of this test section will be evaluated by the Purchasing Agency. If the contractor proposes to mill at higher speeds than this specifications allows, a test strip must be constructed to demonstrate the texture achieved will meet the specification limits.

METHOD OF MEASUREMENT. The Purchasing Agency and the Contractor shall agree on the total square yards milled at the end of each day worked.

Item No.	Item	Pay Unit
E490.7050	Cold Micro Milling (Under 5,000 SY)	SY
E490.7060	Cold Micro Milling (5,001 to 10,000 SY)	SY
E490.7070	Cold Micro Milling (10,000 to 20,000 SY)	SY
E490.7080	Cold Micro Milling Over 20,000 SY)	SY
E490.7090	Cold Micro Milling – Maximum, Per Day	LS
E490.7095	Mobilization	LS

SECTION E603 – CULVERT AND STORM DRAINS

Section 603 of the NYSDOT Standard Specifications dated May 1, 2008, and all addenda shall apply except as modified herein.

Price bid per linear foot of various size corrugated pipe to include connecting bands and bolts will be as follows:

1. For Round Corrugated Pipe

   A. 6" to 54" pipe, additional 1 foot (12") of pipe per bid price per foot.

   B. 60" and over additional 2 feet (24") of pipe as per bid price per foot.

2. For Pipe - Arch Corrugated Pipe

   A. 14" x 9" to 64" x 43" pipe, additional 1 foot (12") of pipe as per bid price per foot.

   B. 71" x 47" and over, additional 2 feet (24") of pipe as per bid price per foot.

Pipe specified as Polymer coated shall also meet the following requirements:

Corrugated steel pipe and pipe arches shall be pre-coated with P.V.C. plastiscol paint as per AASHTO M-246. Fabrication of the pipe and pipe arch shall be as per AASHTO M-245 and shall have 10 mils of coating on the interior of the pipe and 3 mils on the exterior (AASHTO M-246 Type B).

All Pipe Prices per linear foot will include F.0.B. any point in Erie County.

Item No.	Item	Pay Unit
E603.051016	Corrugated Steel Pipe (2-2/3 in. x ½ in. Corrugations) 12-inch, 16 Gauge	Foot
E603.051116	Corrugated Steel Pipe (2-2/3 in. x ½ in. Corrugations) 15-inch, 16 Gauge	Foot
E603.051216	Corrugated Steel Pipe (2-2/3 in. x ½ in. Corrugations) 18-inch, 16 Gauge	Foot
E603.051316	Corrugated Steel Pipe (2-2/3 in. x ½ in. Corrugations) 21-inch, 16 Gauge	Foot
E603.051414	Corrugated Steel Pipe (2-2/3 in. x ½ in. Corrugations) 24-inch, 14 Gauge	Foot
E603.051614	Corrugated Steel Pipe (2-2/3 in. x ½ in. Corrugations) 30-inch, 14 Gauge	Foot
E603.051814	Corrugated Steel Pipe (2-2/3 in. x ½ in. Corrugations) 36-inch, 14 Gauge	Foot
E603.051912	Corrugated Steel Pipe (2-2/3 in. x ½ in. Corrugations) 42-inch, 12 Gauge	Foot
E603.052012	Corrugated Steel Pipe (2-2/3 in. x ½ in. Corrugations) 48-inch, 12 Gauge	Foot
E603.052112	Corrugated Steel Pipe (2-2/3 in. x ½ in. Corrugations) 54-inch, 12 Gauge	Foot
E603.052210	Corrugated Steel Pipe (2-2/3 in. x ½ in. Corrugations) 60-inch, 10 Gauge	Foot
E603.052310	Corrugated Steel Pipe (2-2/3 in. x ½ in. Corrugations) 66-inch, 10 Gauge	Foot
E603.052410	Corrugated Steel Pipe (2-2/3 in. x ½ in. Corrugations) 72-inch, 10 Gauge	Foot

SECTION E603 – CULVERT AND STORM DRAINS

Item No.	Item	Pay Unit
E603.081116	Corrugated Steel Pipe Arch - (2-2/3 in. x ½ in.) 17”x13”, 16 Gauge	Foot
E603.081216	Corrugated Steel Pipe Arch - (2-2/3 in. x ½ in.) 21”x15”, 16 Gauge	Foot
E603.081316	Corrugated Steel Pipe Arch - (2-2/3 in. x ½ in.) 24”x18”, 16 Gauge	Foot
E603.081414	Corrugated Steel Pipe Arch - (2-2/3 in. x ½ in.) 28”x20”, 14 Gauge	Foot
E603.081614	Corrugated Steel Pipe Arch - (2-2/3 in. x ½ in.) 35”x24”, 14 Gauge	Foot
E603.081812	Corrugated Steel Pipe Arch - (2-2/3 in. x ½ in.) 42”x49”, 12 Gauge	Foot
E603.081912	Corrugated Steel Pipe Arch - (2-2/3 in. x ½ in.) 49”x33”, 12 Gauge	Foot
E603.082010	Corrugated Steel Pipe Arch - (2-2/3 in. x ½ in.) 57”x38”, 10 Gauge	Foot
E603.082012	Corrugated Steel Pipe Arch - (2-2/3 in. x ½ in.) 57”x38”, 12 Gauge	Foot
E603.082112	Corrugated Steel Pipe Arch - (2-2/3 in. x ½ in.) 64”x43”, 12 Gauge	Foot
E603.082110	Corrugated Steel Pipe Arch - (2-2/3 in. x ½ in.) 64”x43”, 10 Gauge	Foot
E603.082210	Corrugated Steel Pipe Arch - (2-2/3 in. x ½ in.) 71”x47”, 10 Gauge	Foot
E603.082208	Corrugated Steel Pipe Arch - (2-2/3 in. x ½ in.) 71”x47”, 8 Gauge	Foot
E603.171216	Galivanized Steel End Section – (2 2/3 in. x ½ in.) 12” Diameter, 16 Gauge	Each
E603.171516	Galivanized Steel End Section – (2 2/3 in. x ½ in.) 15” Diameter, 16 Gauge	Each
E603.171816	Galivanized Steel End Section – (2 2/3 in. x ½ in.) 18” Diameter, 16 Gauge	Each
E603.172116	Galivanized Steel End Section – (2 2/3 in. x ½ in.) 21” Diameter, 16 Gauge	Each
E603.172416	Galivanized Steel End Section – (2 2/3 in. x ½ in.) 24” Diameter, 16 Gauge	Each
E603.173014	Galivanized Steel End Section – (2 2/3 in. x ½ in.) 30” Diameter, 14 Gauge	Each
E603.173614	Galivanized Steel End Section – (2 2/3 in. x ½ in.) 36” Diameter, 14 Gauge	Each
E603.174212	Galivanized Steel End Section – (2 2/3 in. x ½ in.) 42” Diameter, 12 Gauge	Each
E603.174812	Galivanized Steel End Section – (2 2/3 in. x ½ in.) 48” Diameter, 12 Gauge	Each
E603.175412	Galivanized Steel End Section – (2 2/3 in. x ½ in.) 54” Diameter, 12 Gauge	Each

SECTION E603 – CULVERT AND STORM DRAINS

Item No.	Item	Pay Unit
E603.176010	Galivanized Steel End Section – (2 2/3 in. x ½ in.) 60” Diameter, 10 Gauge	Each
E603.176610	Galivanized Steel End Section – (2 2/3 in. x ½ in.) 66” Diameter, 10 Gauge	Each
E603.177210	Galivanized Steel End Section – (2 2/3 in. x ½ in.) 72” Diameter, 10 Gauge	Each
E603.177810	Galivanized Steel End Section – (2 2/3 in. x ½ in.) 78” Diameter, 10 Gauge	Each
E603.178410	Galivanized Steel End Section – (2 2/3 in. x ½ in.) 84” Diameter, 10 Gauge	Each
E603.181416	Galivanized Steel End Section – (2 2/3 in. x ½ in.) 14” x 9”, 16 Gauge	Each
E603.181716	Galivanized Steel End Section – (2 2/3 in. x ½ in.) 17” x13”, 16 Gauge	Each
E603.182116	Galivanized Steel End Section – (2 2/3 in. x ½ in.) 21” x 15”, 16 Gauge	Each
E603.182416	Galivanized Steel End Section – (2 2/3 in. x ½ in.) 24” x18”, 16 Gauge	Each
E603.182814	Galivanized Steel End Section – (2 2/3 in. x ½ in.) 28” x 20”, 14 Gauge	Each
E603.183514	Galivanized Steel End Section – (2 2/3 in. x ½ in.) 35” x24”, 14 Gauge	Each
E603.184212	Galivanized Steel End Section – (2 2/3 in. x ½ in.) 42” x 29”, 12 Gauge	Each
E603.184912	Galivanized Steel End Section – (2 2/3 in. x ½ in.) 49” x 33”, 12 Gauge	Each
E603.185712	Galivanized Steel End Section – (2 2/3 in. x ½ in.) 57” x 38”, 12 Gauge	Each
E603.186412	Galivanized Steel End Section – (2 2/3 in. x ½ in.) 64” x 43”, 12 Gauge	Each
E603.187110	Galivanized Steel End Section – (2 2/3 in. x ½ in.) 71” x 47”, 10 Gauge	Each
E603.99030616	Galivanized Steel End Section – (2 2/3 in. x ½ in.) 6” diameter, 16 Gauge Elbow	Each
E603.99031216	Galivanized Steel End Section – (2 2/3 in. x ½ in.) 12” diameter, 16 Gauge Elbow	Each
E603.99031516	Galivanized Steel End Section – (2 2/3 in. x ½ in.) 15” diameter, 16 Gauge Elbow	Each
E603.99031816	Galivanized Steel End Section – (2 2/3 in. x ½ in.) 18” diameter, 16 Gauge Elbow	Each
E603.99032414	Galivanized Steel End Section – (2 2/3 in. x ½ in.) 24” diameter, 14 Gauge Elbow	Each
E603.99040616	Galivanized Steel End Section – (2 2/3 in. x ½ in.) 6” diameter, 16 Gauge Tee	Each
E603.99041216	Galivanized Steel End Section – (2 2/3 in. x ½ in.) 12” diameter, 16 Gauge Tee	Each

SECTION E603 – CULVERT AND STORM DRAINS

Item No.	Item	Pay Unit
E603.99041516	Galivanized Steel End Section – (2 2/3 in. x ½ in.) 15” diameter, 16 Gauge Tee	Each
E603.99041816	Galivanized Steel End Section – (2 2/3 in. x ½ in.) 18” diameter, 16 Gauge Tee	Each
E603.99042414	Galivanized Steel End Section – (2 2/3 in. x ½ in.) 24” diameter, 14 Gauge Tee	Each
E606.661201	Reinforced Concrete Pipe Class IV – 12” diameter Pick Up	Foot
E606.661502	Reinforced Concrete Pipe Class IV – 15” diameter Pick Up	Foot
E606.661803	Reinforced Concrete Pipe Class IV – 18” diameter Pick Up	Foot
E606.662104	Reinforced Concrete Pipe Class IV – 21” diameter Pick Up	Foot
E606.662405	Reinforced Concrete Pipe Class IV – 24” diameter Pick Up	Foot
E606.663006	Reinforced Concrete Pipe Class IV – 30” diameter Pick Up	Foot
E606.663607	Reinforced Concrete Pipe Class IV – 36” diameter Pick Up	Foot
E606.661208	Reinforced Concrete Pipe Class IV – 12” diameter Delivered	Foot
E606.661509	Reinforced Concrete Pipe Class IV – 15” diameter Delivered	Foot
E606.661810	Reinforced Concrete Pipe Class IV – 18” diameter Delivered	Foot
E606.662111	Reinforced Concrete Pipe Class IV – 21” diameter Delivered	Foot
E606.662412	Reinforced Concrete Pipe Class IV – 24” diameter Delivered	Foot
E606.663013	Reinforced Concrete Pipe Class IV – 30” diameter Delivered	Foot
E606.663614	Reinforced Concrete Pipe Class IV – 36” diameter Delivered	Foot

SECTION E603 – CULVERT AND STORM DRAINS

SMOOTH INTERIOR CORRUGATED POLYETHYLENE PIPE

All pipe will meet the requirements of NYSDOT Standard Specifications, where applicable and AASHTO Designation: ***M294.TYPE S*** or **TYPE SP** or as established by Erie County Department of Public Works.

MATERIALS

The smooth lined corrugated polyethylene pipe shall conform to the requirements of Subsection 706-12, Smooth Interior Corrugated Polyethylene Pipe, of the Standard Specifications.

The pipe also must exceed the minimum engineering property values as specified in Section 18 of the AASHTO Standard Specifications for Highway Bridges. These properties are listed below:

Section Properties - PE Corrugated Pipes

Normal Size (in.)	Min I.D. (in.)	Max O.D. (in.)	Min A (sq. in./ft.)	Min C (in.)	Min I (in. 4 in)
12	11.8	14.7	1.5	0.35	0.024
15	14.8	18.0	1.91	0.45	0.053
18	17.7	21.5	2.34	0.50	0.062
24	23.6	28.7	3.14	0.65	0.116
30	29.5	36.4	3.92	0.75	0.163
36	35.5	42.3	4.50	0.90	0.222
42	41.5	48.0	4.69	1.11	0.543
48	47.5	55.0	5.15	1.15	0.543

Acceptance of this material will be based on the manufacturer's certification of compliance with these specification requirements and the appearance of the manufacturer's name on the NYSDOT Approved List.

BASIS OF PAYMENT

Item No.	Item	Pay Unit
E603.981201	Smooth Interior Corrugated Polyethylene Pipe - 12” diameter	Foot
E603.981202	Smooth Interior Corrugated Polyethylene Pipe – Bell End	Foot
E603.981203	Smooth Interior Corrugated Polyethylene Pipe – Couplings	Each
E603.981501	Smooth Interior Corrugated Polyethylene Pipe - 15” diameter	Foot
E603.981502	Smooth Interior Corrugated Polyethylene Pipe – Bell End	Foot
E603.981503	Smooth Interior Corrugated Polyethylene Pipe – Couplings	Each
E603.981801	Smooth Interior Corrugated Polyethylene Pipe - 18” diameter	Foot
E603.981802	Smooth Interior Corrugated Polyethylene Pipe – Bell End	Foot
E603.981803	Smooth Interior Corrugated Polyethylene Pipe – Couplings	Each
E603.982401	Smooth Interior Corrugated Polyethylene Pipe - 24” diameter	Foot
E603.982402	Smooth Interior Corrugated Polyethylene Pipe – Bell End	Foot
E603.982403	Smooth Interior Corrugated Polyethylene Pipe – Couplings	Each
E603.983001	Smooth Interior Corrugated Polyethylene Pipe - 30” diameter	Foot
E603.983002	Smooth Interior Corrugated Polyethylene Pipe – Bell End	Foot
E603.983003	Smooth Interior Corrugated Polyethylene Pipe – Couplings	Each
E603.983601	Smooth Interior Corrugated Polyethylene Pipe - 36” diameter	Foot

SECTION E603 – CULVERT AND STORM DRAINS

Item No.	Item	Pay Unit
E603.983602	Smooth Interior Corrugated Polyethylene Pipe – Bell End	Foot
E603.983603	Smooth Interior Corrugated Polyethylene Pipe – Couplings	Each
E603.984201	Smooth Interior Corrugated Polyethylene Pipe - 42” diameter	Foot
E603.984202	Smooth Interior Corrugated Polyethylene Pipe – Bell End	Foot
E603.984203	Smooth Interior Corrugated Polyethylene Pipe – Couplings	Each
E603.984801	Smooth Interior Corrugated Polyethylene Pipe - 48” diameter	Foot
E603.984802	Smooth Interior Corrugated Polyethylene Pipe – Bell End	Foot
E603.984803	Smooth Interior Corrugated Polyethylene Pipe – Couplings	Each

SECTION E603 – CULVERT AND STORM DRAINS

ITEM 15603.63 - PRECAST CONCRETE BOX CULVERT (Fill Height Less Than 0.6 m)
ITEM 15603.64 - PRECAST CONCRETE BOX CULVERT (Fill Height 0.6 m or Greater)
ITEM 15603.65 - PRECAST CONCRETE BOX CULVERT (Bridge Size, Fill Height Less Than 0.6 m)
ITEM 15603.66 - PRECAST CONCRETE BOX CULVERT (Bridge Size, Fill Height 0.6 m or Greater)

This group of bid items shall be in accordance with the attached specification with the following exceptions:

The County will furnish and deliver the precast culvert sections and related materials.

The Contractor shall furnish and install waterproofing materials under Item 18595.53M Membrane Waterproofing System for Culverts.

The Contractor shall unload and install precast sections and all related materials.

The Contractor's bid includes the cost of all necessary hoisting equipment to accomplish the work.

Payment will be per lineal feet of culvert installed, not meters.

1.0 DESCRIPTION

This work shall consist of furnishing and placing single or multi-cell precast reinforced concrete box culvert sections of the type indicated in the plans in accordance with these specifications in the locations indicated and in a manner approved by the Engineer.

2.0 MATERIALS

Precast concrete box culvert shall meet the requirements of Section 706-17 Precast Concrete Box Culverts.

3.0 CONSTRUCTION DETAILS

A. Inspection, Storage and Handling -

Precast box sections will be inspected at the construction site to determine any damage during shipment and for conformance to the dimensional tolerances. An additional inspection will be made prior to placement of precast box sections to determine any damage during storage.

B. Installation

1. Excavation

The requirements specified in Section 206 Trench, Culvert and Structure Excavation, that apply to culverts and storm drains shall govern, except as modified in the plans.

2. Placement

The precast manufacturer shall have a representative available to assist in the installation of the box culvert. Precast box sections shall be installed, true to line and grade, in accordance with the contract plans. Placement of the box sections shall start at the downstream end and proceed upstream, unless otherwise indicated in the contract plans.

3. Joints.

Precast box sections shall be installed with the female end upstream and the male joints fully entered therein. The joint openings between adjacent precast units shall not exceed 20 mm. The joints shall be sealed with a continuous gasket installed at the precast plant. Joints shall be drawn together with mechanical connectors, as shown on the approved working drawings. Culverts with a clear rise greater than 1.3 m shall have a minimum of four connectors per joint. Smaller culverts shall have a minimum of two connectors per joint. The number of mechanical connectors supplied shall be equal to the number of connectors required per joint multiplied by the number of joints unless otherwise approved by the Engineer. After installation, connectors may be left on or removed at the contractor's option, unless otherwise noted in the contract plans. When the contract plans require, or the contractor chooses to leave the connectors in place, they shall be located so that they do not create an obstruction inside the culvert. Gaps which occur on the interior surfaces of the culvert due to misalignment or grade difference shall be filled as ordered by the Engineer, with an approved concrete repair material so as to produce a smooth continuous surface.

4. **Backfilling.**

The types of materials to be used in backfilling and the procedure of placement shall conform to the contract plans and the applicable provisions of Subsection 203-3.15.

.

4.0 METHOD OF MEASUREMENT

The quantity to be measured for concrete box culvert sections shall be the number of meters (laying length) furnished and installed in the work. Meters (laying length) shall be measured by multiplying the number of whole units by the nominal length of each unit and adding thereto to the length of any fractional units incorporated in the work. The nominal length of a unit or fractional unit shall be the inside measured length from one butting end to the other butting end measured along the bottom centerline of the unit.

5.0 BASIS OF PAYMENT

The quantity to be paid for shall be the number of meters of each size box culvert section incorporated in the work. The unit price bid shall include the cost of furnishing all labor, materials, equipment and installation supervision by the precast manufacturers representative, necessary to satisfactorily complete the work. The cost of furnishing and installing headwalls and cut off walls shall also be included in the unit price bid.

Payment shall be made under Item 15603.63xxyy M, 15603.64xxyy M, 15603.65xxyy M and 15603.66xxyy M, where xx and yy, as indicated in the itemized proposal shall mean the inside span and rise dimensions respectively in meters and tenths of a meter, of the precast section.

Item No.	**Item**	**Pay Unit**
15603.63	Precast Concrete Box Culvert (Fill height less than 0.6m)	LF
15603.64	Precast Concrete Box Culvert (Fill height 0.6m or greater)	LF
15603.65	Precast Concrete Box Culvert (Bridge size; fill height less than 0.6m)	LF
15603.66	Precast Concrete Box Culvert (Bridge size; fill height 0.6m or greater)	LF

SECTION E603 – CULVERT AND STORM DRAINS

PVC (POLYVINYL CHLORIDE) GRAVITY SEWER PIPE AND FITTINGS

A. Pipe:

1. For pipe diameters 4' thru 15", the polyvinyl chloride (PVC) pipe shall be manufactured in accordance with the latest ASTM Specifications D-333 "Type PSP Poly (Vinyl Chloride) (PVC) Sewer Pipe and Fittings or ASTM Specification D-3034 "Type PSM Poly (Vinyl Chloride) (PVC) Sewer Pipe and Fittings". For pipe diameters 18" thru 27", the pipe manufacturer shall satisfy the requirements of the latest ASTM Specification F-679, Type I. All pipe shall be SDR-35 or thicker wall and the PVC Compound shall meet the requirements of the latest ASTM Specification D-1784. Pipe in compliance with these standards shall be clearly marked with pipe size (nominal), cell classification, SDR number, PVC Sewer Pipe, and ASTM Designation.

B. Joints

1. The joint shall provide a permanent seal against exfiltration or infiltration. The joining technique will be with elastomeric gasket.

2. Elastomeric Gasket Joints - The critical sealing dimensions of the bell, spigot, and gasket shall be in accordance with the manufacturer's standard dimensions and tolerances. The elastomeric compound shall comply in all respects with the physical requirements specified in ASTM F477-76. The gasket shall provide an adequate compressive force against the sealing surfaces of the bell and spigot so as to effect a positive seal under all combinations of the joint tolerances. The gasket shall be the only element depended upon to make the joint tolerances. The gasket shall be the only element depended upon to make the joint flexible and water tight. The gasket material shall be oil and gasoline resistant.

C. Fittings

1. All PVC wyes, tees and elbows shall be manufactured in classes suitable for the class of pipe as specified above.

D. Payment

1. All PVC pipe will be measured and paid by Linear Feet. All PVC pipe fittings will be paid by each. Payment will be made under the items on the following page.

FLEXIBLE SEWER LINE REPAIR COUPLINGS/DONUTS

A. Couplings

Shall be made of tough, elastomeric plastic, which shall provide strength while being resilient and unaffected by soil conditions. Couplings shall be resistant to chemicals and normal sewer gases. Couplings shall be leakproof, rootproof,and seal against infiltration and exfiltration. Couplings shall be fastened in place by the use of (2) #35 adjustable stainless steel clamps which can be installed with a screwdriver or a scoket wrench.

B. Donuts

Shall be elastomeric donut-shaped rings for compression sealing of sewer pipe joints, utilizing the bell end of an existing sewer pipe.

C. Payment

All couplings and donuts will be paid by each. Payment will be made under the items this page.

603-5 BASIS OF PAYMENT

603-5.01 General. The accepted quantities of all pipe construction and reconstruction will be paid for at the contract price bid which will include the cost of furnishing all materials F.O.B. to any point in Erie County.

Payment will be made under:

Item No.	Item	Pay Unit
E603.990504	PVC Pipe, 4” diameter – 14’ in Length	LS
E603.990506	PVC Pipe, 6” diameter – 14’ in Length	LS
E603.990508	PVC Pipe, 8” diameter – 14’ in Length	LS
E603.990510	PVC Pipe, 10” diameter – 14’ in Length	LS
E603.990512	PVC Pipe, 12” diameter – 14’ in Length	LS
E603.990515	PVC Pipe, 15” diameter – 14’ in Length	LS
E603.990518	PVC Pipe, 18” diameter – 14’ in Length	LS
E603.990521	PVC Pipe, 21” diameter – 14’ in Length	LS
E603.991104	PVC Fittings, 22 ½” Street ELL, 4” diameter	Each
E603.991106	PVC Fittings, 22 ½” Street ELL, 6” diameter	Each
E603.991108	PVC Fittings, 22 ½” Street ELL, 8” diameter	Each
E603.991110	PVC Fittings, 22 ½” Street ELL, 10” diameter	Each
E603.991112	PVC Fittings, 22 ½” Street ELL, 12” diameter	Each
E603.991115	PVC Fittings, 22 ½” Street ELL, 15” diameter	Each
E603.99204	PVC Fittings, 22 ½” Bell-to-Bell, 4” diameter	Each
E603.99206	PVC Fittings, 22 ½” Bell-to-Bell, 6” diameter	Each
E603.99208	PVC Fittings, 22 ½” Bell-to-Bell, 8” diameter	Each
E603.99210	PVC Fittings, 22 ½” Bell-to-Bell, 10” diameter	Each
E603.99212	PVC Fittings, 22 ½” Bell-to-Bell, 12” diameter	Each
E603.99215	PVC Fittings, 22 ½” Bell-to-Bell, 15” diameter	Each
E603.99218	PVC Fittings, 22 ½” Bell-to-Bell, 18” diameter	Each
E603.99221	PVC Fittings, 22 ½” Bell-to-Bell, 21” diameter	Each
E603.991304	PVC Fittings, 45 Street ELL, 4” diameter	Each
E603.991306	PVC Fittings, 45 Street ELL, 6” diameter	Each
E603.991308	PVC Fittings, 45 Street ELL, 8” diameter	Each
E603.991310	PVC Fittings, 45 Street ELL, 10” diameter	Each
E603.991312	PVC Fittings, 45 Street ELL, 12” diameter	Each
E603.991315	PVC Fittings, 45 Street ELL, 15” diameter	Each

SECTION E603 – CULVERT AND STORM DRAINS

Item No.	Item	Pay Unit
E603.991404	PVC Fittings, 45 Bell-to-Bell, 4” diameter	Each
E603.991406	PVC Fittings, 45 Bell-to-Bell, 6” diameter	Each
E603.991408	PVC Fittings, 45 Bell-to-Bell, 8” diameter	Each
E603.991410	PVC Fittings, 45 Bell-to-Bell, 10” diameter	Each
E603.991412	PVC Fittings, 45 Bell-to-Bell, 12” diameter	Each
E603.991415	PVC Fittings, 45 Bell-to-Bell, 15” diameter	Each
E603.991504	PVC Fittings, Wye, 4” diameter	Each
E603.991506	PVC Fittings, Wye, 6” diameter	Each
E603.991508	PVC Fittings, Wye, 8” diameter	Each
E603.991510	PVC Fittings, Wye, 10” diameter	Each
E603.991512	PVC Fittings, Wye, 12” diameter	Each
E603.991515	PVC Fittings, Wye, 15” diameter	Each
E603.991606	PVC Fittings, Wye x 6”, 6” diameter	Each
E603.991608	PVC Fittings, Wye x 6”, 8” diameter	Each
E603.991610	PVC Fittings, Wye x 6”, 10” diameter	Each
E603.991612	PVC Fittings, Wye x 6”, 12” diameter	Each
E603.991615	PVC Fittings, Wye x 6”, 15” diameter	Each
E603.9920	6” Male x 4” Female Reducer	Each
E603.9921	6” Cast Iron Threaded Cleanout Adaptor with Brass Cleanout Cap	Each
E603.9922	Pipe Lubricant	Quart
E603.30104	PVC to Clay, 4” diameter	Each
E603.30106	PVC to Clay, 6” diameter	Each
E603.30108	PVC to Clay, 8” diameter	Each
E603.30110	PVC to Clay,10” diameter	Each
E603.30112	PVC to Clay, 12” diameter	Each
E603.30115	PVC to Clay, 15” diameter	Each
E603.30118	PVC to Clay, 18” diameter	Each
E603.30204	PVC to PVC, 4” diameter	Each
E603.30206	PVC to PVC, 6” diameter	Each
E603.30208	PVC to PVC 8” diameter	Each
E603.30210	PVC to PVC,10” diameter	Each
E603.30212	PVC to PVC, 12” diameter	Each
E603.30215	PVC to PVC, 15” diameter	Each
E603.30218	PVC to PVC, 18” diameter	Each
E603.30304	PVC to ACP, 4” diameter	Each
E603.30306	PVC to ACP, 6” diameter	Each
E603.30308	PVC to ACP 8” diameter	Each
E603.30310	PVC to ACP,10” diameter	Each
E603.30312	PVC to ACP, 12” diameter	Each
E603.30315	PVC to ACP, 15” diameter	Each
E603.30318	PVC to ACP, 18” diameter	Each

SECTION E603 – CULVERT AND STORM DRAINS

Item No.	Item	Pay Unit
E603.30404	PVC to RCP, 4” diameter	Each
E603.30406	PVC to RCP, 6” diameter	Each
E603.30408	PVC to RCP 8” diameter	Each
E603.30410	PVC to RCP,10” diameter	Each
E603.30412	PVC to RCP, 12” diameter	Each
E603.30415	PVC to RCP, 15” diameter	Each
E603.30418	PVC to RCP, 18” diameter	Each

SECTION E604 – DRAINAGE STRUCTURES

Section 604 of the NYSDOT Standard Specifications dated May 1, 2008, and all addenda shall apply except as modified herein.

E604-1 DESCRIPTION. This work shall include all labor, materials and equipment required to manufacture and deliver the indicated size of catch basin, riser or adjustment ring.

E604-2 MATERIALS.

Precast Concrete Manholes and Riser Rings.

A. Manhole Base. Precast manhole bases shall be monolithic reinforced concrete, and shall comply with the latest ASTM Specification C-478 ***"Precast Reinforced Concrete Manhole Sections".***

The bottom floor of the monolithic precast base shall have a minimum thickness of eight (8) inches and shall project no less than six (6) inches beyond the outside the outside walls of the monolithic precast base to form a flange or annular footing intended to resist uplift.

The lowest edges of holes or cutouts for line and branch sewers shall be no less than six (6) inches above the inside surface of the floor or footing of the monolithic precast base.

No penetrating lifting holes will be allowed.

B. Manhole Barrel, Cone, Reducer, and Flat Top. All precast concrete manholes, barrels, and reducers shall be constructed in accordance with the latest ASTM Specification C-478 ***"Precast Reinforced Concrete Manhole Sections"***, with the following exceptions: The manhole barrel walls shall be five (5) inches thick for a four (4) foot diameter manhole, six (6) inches thick for a five (5 foot diameter manhole, and seven (7) inches thick for a six (6) foot diameter manhole. The upper section of the precast manhole shall be an eccentric cone design having either a 24" diameter inside or a 32" inside diameter top opening with an 8" (width) top bearing surface.

Precast cones shall have a minimum height of two feet, six inches (2'6") and a maximum height of four (4) feet.

Flat Top slabs shall be a minimum of eight (8) inches thick and shall be capable of supporting a HS-25 loading. The flat top slab shall have either a 24" diameter inside or a 32" inside diameter top opening with and 8" (width) top bearing surface.

No penetrating lifting holes will be allowed.

C. Joints. The manhole barrel and cone joints shall concrete with a confined o-ring, neoprene gasket in accordance with ASTM Specification C-443.

D. Manhole Steps. Manhole steps shall be forged aluminum or steel reinforced co-polymer polypropylene, and shall be placed in the forms while the manhole sections are being cast or securely grouted in place after casting, and shall be in accordance with Erie County Department of Environment & Planning, Division of Sewerage Management Standard Detail 17

as shown on the last page.

E. Manhole Inlet/Outlet. All manhole penetrations for connection of inlet or outlet branch sewers shall be either machine cut or cast in place.

At each point where a sewer line or branch sewer is to be connected to the monolithic precast bases or manhole barrels, a seal assembly shall be supplied to seal the annular space between the pipe and hole. This seal assembly shall consist of rubber gaskets or links which can be mechanically compressed to form watertight barriers. Such sealing assemblies shall be: RESSEAL consisting of rubber gasket, cast iron compression flange, *"Press-Wedge I"* gasket or *"Watertight Pipe to Manhole rubber Boot Assembly"* stainless steel band clamps as manufactured by Press Seal Gasket Corporation, Fort Wayne, Indiana; Cor-Ten-ten bolt assembly manufactured by the scales Manufacturing Corporation of Newburgh, New York; LINK-SEAL consisting of solid synthetic rubber links connected to each other with heavy, elongated washers, bolts and nuts, as manufactured by Thunderline Corporation of Wayne, Michigan, or equal.

F. Manhole Adjusting Rings. Manhole adjusting rings shall be reinforced precast concrete, using 4000 PSI concrete, and shall be constructed in accordance with the latest ASTM Specification C-47S. Prefabricated Adjustment Rings for Manholes as required in Item 604.10M *NEW YORK STATE SPECIFICATIONS* DATED MAY 1, 2008 and all addenda.

The difference between inside diameter and outside diameter of the adjusting rings (bearing surface) shall be a minimum of eight (8) inches.

The above listed units are to be of semi-steel, seat machined so that the component parts will not rock when in place. They are to be for recess 1-1/2" deep.

E604-4 METHOD OF MEASUREMENT. Payment shall be made for each unit delivered to the location directed by the municipality. All units shall be F.O.B. trucks.

E604-5 BASIS OF PAYMENT.

Payment will be made under the following items:

Item No.	Item	Pay Unit
E604.0501	Drainage Structures, 24" SQ x 24" DP Precast Catch Basin	EA
E604.0502	Drainage Structures, 24" SQ x 36" DP Precast Catch Basin	EA
E604.0503	Drainage Structures, 24" SQ x 48" DP Precast Catch Basin	EA
E604.0504	Drainage Structures, 24" SQ x 54" DP Precast Catch Basin	EA
E604.0505	Drainage Structures, 24" SQ x 66" DP Precast Catch Basin	EA
E604.0506	Drainage Structures, 24" SQ x 72" DP Precast Catch Basin	EA
E604.0507	Drainage Structures, 30" SQ x 36" DP Precast Catch Basin	EA
E604.0508	Drainage Structures, 30" SQ x 54" DP Precast Catch Basin	EA
E604.0509	Drainage Structures, 30" SQ x 66" DP Precast Catch Basin	EA
E604.0510	Drainage Structures, 30" SQ x 72" DP Precast Catch Basin	EA
E604.0511	Drainage Structures, 36" SQ x 42" DP Precast Catch Basin	EA
E604.0512	Drainage Structures, 36" SQ x 54" DP Precast Catch Basin	EA
E604.0701	Round Manhole Adjusting Devices, 24" Diameter, 1-1/4" Rise	EA

Item No.	Item	Pay Unit
E604.0702	Round Manhole Adjusting Devices, 24" Diameter, 1-1/2" Rise	EA
E604.0703	Round Manhole Adjusting Devices, 24" Diameter, 1-3/4" Rise	EA
E604.0704	Round Manhole Adjusting Devices, 24" Diameter, 2" Rise	EA
E604.0705	Round Manhole Adjusting Devices, 24" Diameter, 2-1/4" Rise	EA
E604.0706	Round Manhole Adjusting Devices, 24" Diameter, 2-3/4" Rise	EA
E604.0707	Round Manhole Adjusting Devices, 24" Diameter, 3" Rise	EA
E604.0708	Round Manhole Adjusting Devices, 24" Diameter, 3-1/4" Rise	EA
E604.0709	Round Manhole Adjusting Devices, 24" Diameter, 3-1/2" Rise	EA
E604.0710	Round Manhole Adjusting Devices, 24" Diameter, 3-3/4" Rise	EA
E604.0711	Round Manhole Adjusting Devices, 24" Diameter, 4" Rise	EA
E604.0712	Round Manhole Adjusting Devices, 24" Diameter, 4-1/4" Rise	EA
E604.0713	Round Manhole Adjusting Devices, 24" Diameter, 4-1/2" Rise	EA
E604.0714	Round Manhole Adjusting Devices, 24" Diameter, 4-3/4" Rise	EA
E604.0715	Round Manhole Adjusting Devices, 24" Diameter, 5" Rise	EA
E604.0801	Rectangular Adjusting Devices, 13"x18" Receiver Grate, 1-1/4" Rise	EA
E604.0802	Rectangular Adjusting Devices, 13"x18" Receiver Grate, 1-1/2" Rise	EA
E604.0803	Rectangular Adjusting Devices, 13"x18" Receiver Grate, 1-3/4" Rise	EA
E604.0804	Rectangular Adjusting Devices, 13"x18" Receiver Grate, 2" Rise	EA
E604.0805	Rectangular Adjusting Devices, 13"x18" Receiver Grate, 2-1/4" Rise	EA
E604.0806	Rectangular Adjusting Devices, 13"x18" Receiver Grate, 2-3/4" Rise	EA
E604.0807	Rectangular Adjusting Devices, 13"x18" Receiver Grate, 3" Rise	EA
E604.0808	Rectangular Adjusting Devices, 13"x18" Receiver Grate, 3-1/4" Rise	EA
E604.0809	Rectangular Adjusting Devices, 13"x18" Receiver Grate, 3-1/2" Rise	EA
E604.0810	Rectangular Adjusting Devices, 13"x18" Receiver Grate, 3-3/4" Rise	EA
E604.0811	Rectangular Adjusting Devices, 13"x18" Receiver Grate, 4" Rise	EA
E604.0812	Rectangular Adjusting Devices, 13"x18" Receiver Grate, 4-1/4" Rise	EA
E604.0813	Rectangular Adjusting Devices, 13"x18" Receiver Grate, 4-1/2" Rise	EA
E604.0814	Rectangular Adjusting Devices, 13"x18" Receiver Grate, 4-3/4" Rise	EA
E604.0815	Rectangular Adjusting Devices, 13"x18" Receiver Grate, 5" Rise	EA
E604.1011	Manhole Adjusting Rings 24" Inside Dia. X 40" Outside Dia. - 1"	EA
E604.1012	Manhole Adjusting Rings 24" Inside Dia. X 40" Outside Dia. - 2"	EA
E604.1013	Manhole Adjusting Rings 24" Inside Dia. X 40" Outside Dia. - 3"	EA
E604.1014	Manhole Adjusting Rings 24" Inside Dia. X 40" Outside Dia. - 4"	EA
E604.1015	Manhole Adjusting Rings 24" Inside Dia. X 40" Outside Dia. - 5"	EA
E604.1016	Manhole Adjusting Rings 24" Inside Dia. X 40" Outside Dia. - 6"	EA
E604.1017	Manhole Adjusting Rings 24" Inside Dia. X 40" Outside Dia. - 1/2" Taper	EA
E604.1018	Manhole Adjusting Rings 24" Inside Dia. X 40" Outside Dia. - 2/3" Taper	EA
E604.1021	Manhole Adjusting Rings 36" Inside Dia. X 52" Outside Dia. - 1"	EA
E604.1022	Manhole Adjusting Rings 36" Inside Dia. X 52" Outside Dia - 2"	EA
E604.1023	Manhole Adjusting Rings 36" Inside Dia. X 52" Outside Dia - 3"	EA
E604.1024	Manhole Adjusting Rings 36" Inside Dia. X 52" Outside Dia - 4"	EA
E604.1025	Manhole Adjusting Rings 36" Inside Dia. X 52" Outside Dia - 5"	EA
E604.1026	Manhole Adjusting Rings 36" Inside Dia. X 52" Outside Dia - 6"	EA
E604.1027	Manhole Adjusting Rings 36" Inside Dia. X 52" Outside Dia - 1/2" Taper	EA
E604.1028	Manhole Adjusting Rings 36" Inside Dia. X 52" Outside Dia - 2/3" Taper	EA
E604.4012	Precast Concrete Manhole Bases 48" Inside Diameter - 2'	EA
E604.4013	Precast Concrete Manhole Bases 48" Inside Diameter - 3'	EA
E604.4014	Precast Concrete Manhole Bases 48" Inside Diameter - 4'	EA
E604.4015	Precast Concrete Manhole Bases 48" Inside Diameter - 5'	EA

Item No.	Item	Pay Unit
E604.4022	Precast Concrete Manhole Bases 60" Inside Diameter - 2'	EA
E604.4023	Precast Concrete Manhole Bases 60" Inside Diameter - 3'	EA
E604.4024	Precast Concrete Manhole Bases 60" Inside Diameter - 4'	EA
E604.4025	Precast Concrete Manhole Bases 60" Inside Diameter - 5'	EA
E604.4032	Precast Concrete Manhole Bases 72" Inside Diameter - 2'	EA
E604.4033	Precast Concrete Manhole Bases 72" Inside Diameter - 3'	EA
E604.4034	Precast Concrete Manhole Bases 72" Inside Diameter - 4'	EA
E604.4035	Precast Concrete Manhole Bases 72" Inside Diameter - 5'	EA
E604.4111	Precast Concrete Barrel Riser Section 48" Inside Diameter - 1'	EA
E604.4112	Precast Concrete Barrel Riser Section 48" Inside Diameter - 2'	EA
E604.4113	Precast Concrete Barrel Riser Section 48" Inside Diameter - 3'	EA
E604.4114	Precast Concrete Barrel Riser Section 48" Inside Diameter - 4'	EA
E604.4121	Precast Concrete Barrel Riser Section 60" Inside Diameter - 1'	EA
E604.4122	Precast Concrete Barrel Riser Section 60" Inside Diameter - 2'	EA
E604.4123	Precast Concrete Barrel Riser Section 60" Inside Diameter - 3'	EA
E604.4124	Precast Concrete Barrel Riser Section 60" Inside Diameter - 4'	EA
E604.4131	Precast Concrete Barrel Riser Section 72" Inside Diameter - 1'	EA
E604.4132	Precast Concrete Barrel Riser Section 72" Inside Diameter - 2'	EA
E604.4133	Precast Concrete Barrel Riser Section 72" Inside Diameter - 3'	EA
E604.4134	Precast Concrete Barrel Riser Section 72" Inside Diameter - 4'	EA
E604.4211	Precast Concrete Top Sections 1' Flat Top - 48" Diameter	EA
E604.4212	Precast Concrete Top Sections 1' Flat Top - 60" Diameter	EA
E604.4213	Precast Concrete Top Sections 1' Flat Top - 72" Diameter	EA
E604.4221	Precast Concrete Top Sections 2' Flat Top - 48" Diameter	EA
E604.4222	Precast Concrete Top Sections 2' Flat Top - 60" Diameter	EA
E604.4223	Precast Concrete Top Sections 2' Flat Top - 72" Diameter	EA
E604.4231	Precast Concrete Top Sections 3' Concentric Cone - 48" Diameter	EA
E604.4232	Precast Concrete Top Sections 3' Concentric Cone - 60" Diameter	EA
E604.4241	Precast Concrete Top Sections 4' Concentric Cone - 48" Diameter	EA
E604.4242	Precast Concrete Top Sections 4' Concentric Cone - 60" Diameter	EA
E604.4251	Precast Concrete Top Sections Manhole "O" Rings - 48" Diameter	EA
E604.4252	Precast Concrete Top Sections Manhole "O" Rings - 60" Diameter	EA
E604.4253	Precast Concrete Top Sections Manhole "O" Rings - 72" Diameter	EA
E604.4308	Precast Concrete Pipe Outlet, Boot & Installation - 8"	EA
E604.4310	Precast Concrete Pipe Outlet, Boot & Installation - 10"	EA
E604.4312	Precast Concrete Pipe Outlet, Boot & Installation - 12"	EA
E604.4315	Precast Concrete Pipe Outlet, Boot & Installation - 15"	EA

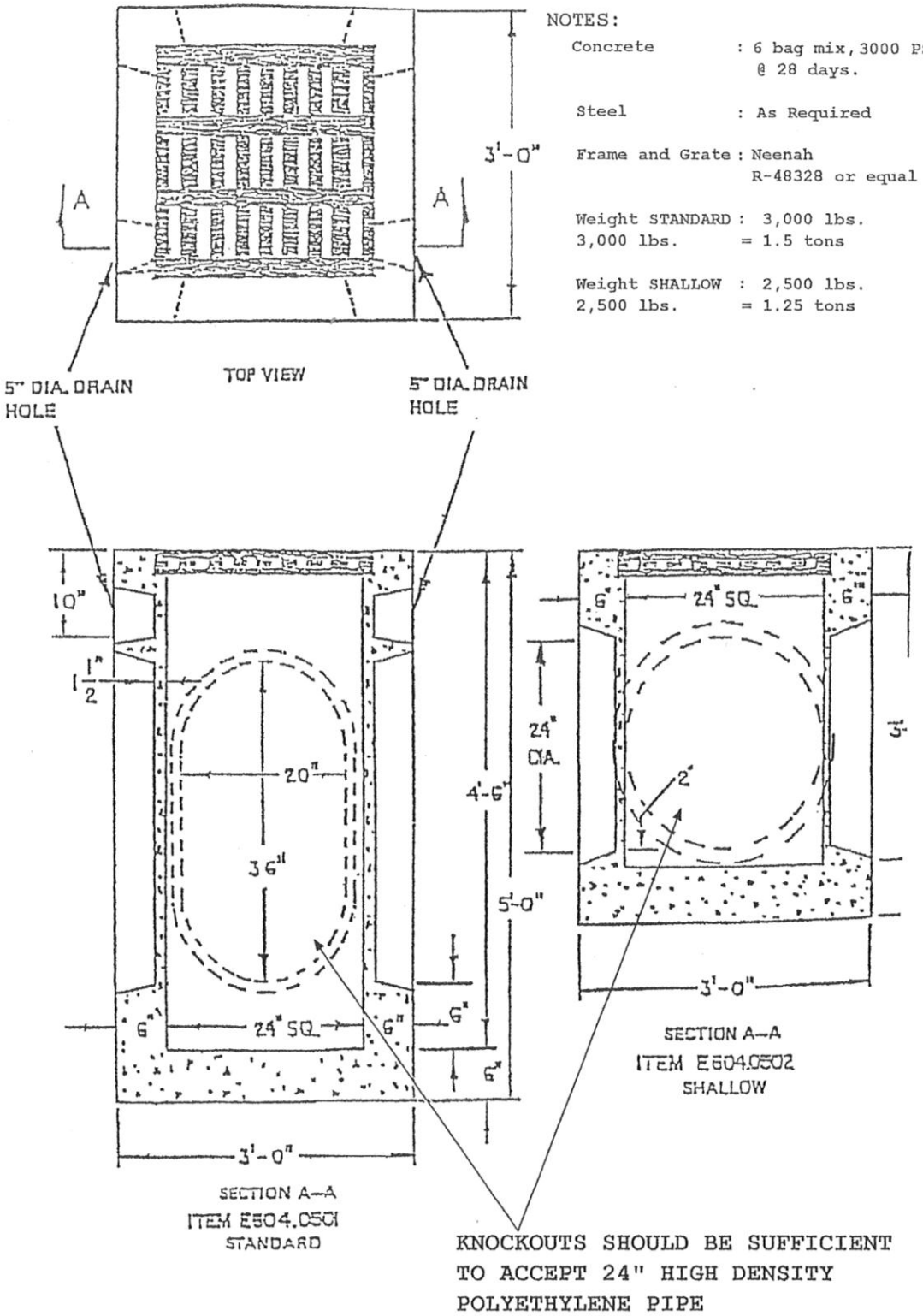
NOTES:
Concrete : 6 bag mix, 3000 PSI @ 28 days.
Steel : As Required
Frame and Grate : Neenah R-48328 or equal
Weight STANDARD : 3,000 lbs.
3,000 lbs. = 1.5 tons
Weight SHALLOW : 2,500 lbs.
2,500 lbs. = 1.25 tons
3'-0"
A
A
TOP VIEW
5" DIA. DRAIN HOLE
5" DIA. DRAIN HOLE
10"
1 1/2"
20"
36"
4'-6"
5'-0"
6"
24" SQ.
6"
6"
6"
3'-0"
SECTION A–A
ITEM E604.0501
STANDARD
6"
24" SQ.
6"
24" DIA.
2"
5'
3'-0"
SECTION A–A
ITEM E604.0502
SHALLOW
KNOCKOUTS SHOULD BE SUFFICIENT TO ACCEPT 24" HIGH DENSITY POLYETHYLENE PIPE

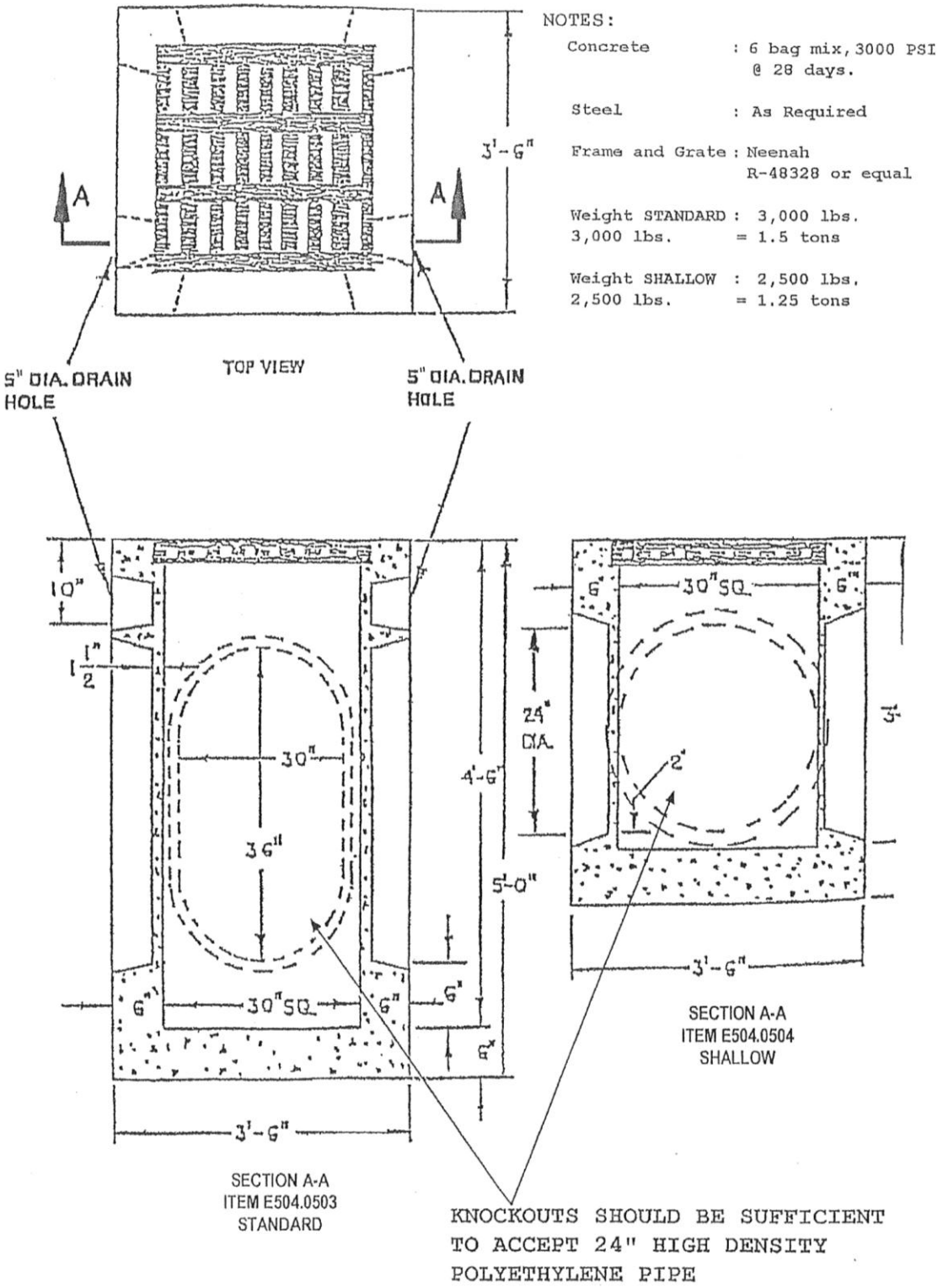
NOTES:
Concrete : 6 bag mix, 3000 PSI @ 28 days.
Steel : As Required
Frame and Grate : Neenah R-48328 or equal
Weight STANDARD : 3,000 lbs. 3,000 lbs. = 1.5 tons
Weight SHALLOW : 2,500 lbs. 2,500 lbs. = 1.25 tons
3'-6"
A
A
TOP VIEW
5" DIA. DRAIN HOLE
5" DIA. DRAIN HOLE
10"
1 1/2"
30"
36"
4'-6"
5'-0"
30"SQ.
6"
6"
6"
6"
3'-6"
SECTION A-A
ITEM E504.0503
STANDARD
24" DIA.
30"SQ.
6"
6"
2"
3'
3'-6"
SECTION A-A
ITEM E504.0504
SHALLOW
KNOCKOUTS SHOULD BE SUFFICIENT TO ACCEPT 24" HIGH DENSITY POLYETHYLENE PIPE

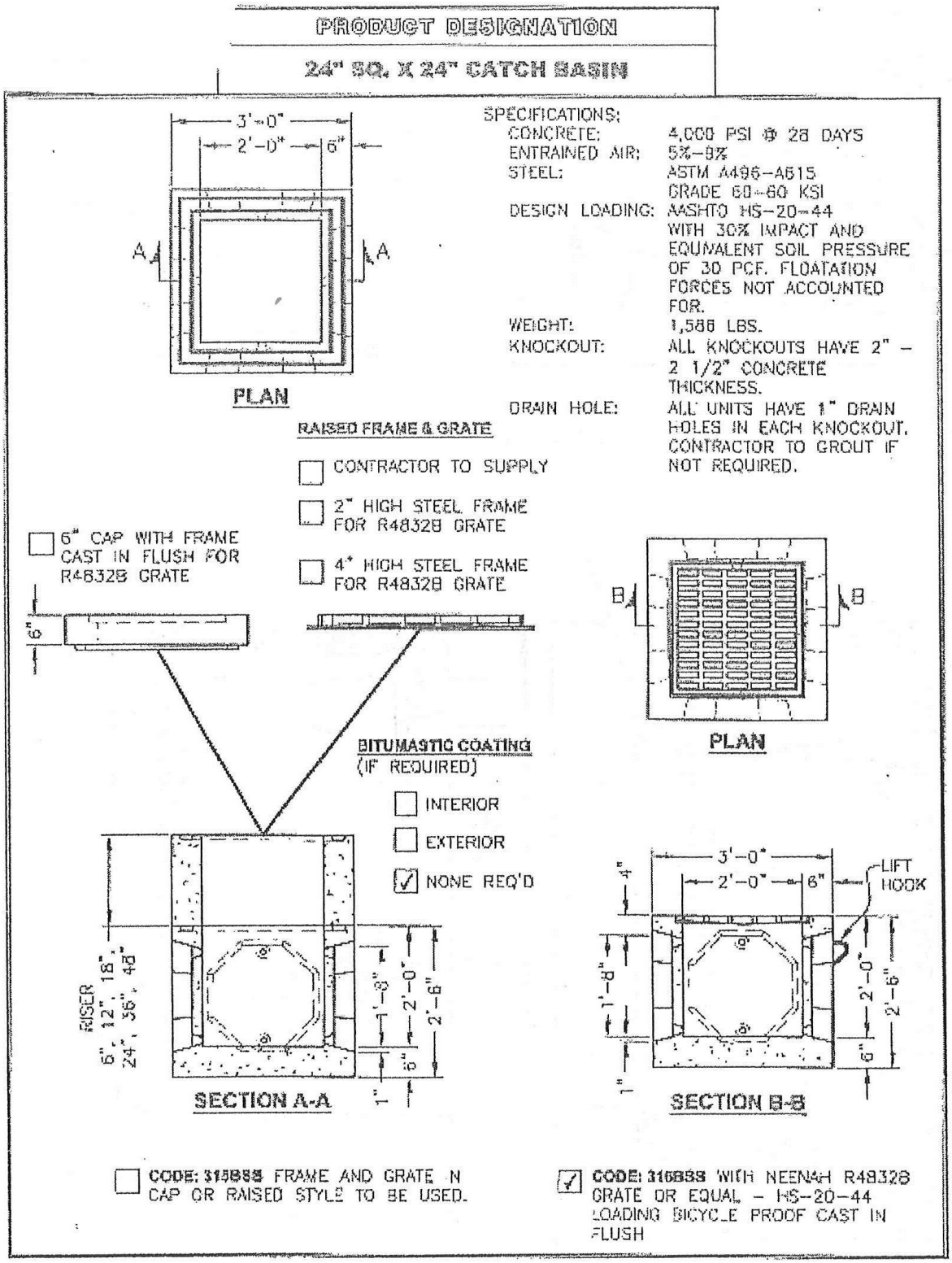
PRODUCT DESIGNATION
24" SQ. X 24" CATCH BASIN
3'-0"
2'-0"
6"
A
A
PLAN
SPECIFICATIONS:
CONCRETE: 4,000 PSI @ 28 DAYS
ENTRAINED AIR: 5%-9%
STEEL: ASTM A496-A615 GRADE 60-60 KSI
DESIGN LOADING: AASHTO HS-20-44 WITH 30% IMPACT AND EQUIVALENT SOIL PRESSURE OF 30 PCF. FLOATATION FORCES NOT ACCOUNTED FOR.
WEIGHT: 1,586 LBS.
KNOCKOUT: ALL KNOCKOUTS HAVE 2" - 2 1/2" CONCRETE THICKNESS.
DRAIN HOLE: ALL UNITS HAVE 1" DRAIN HOLES IN EACH KNOCKOUT. CONTRACTOR TO GROUT IF NOT REQUIRED.
RAISED FRAME & GRATE
CONTRACTOR TO SUPPLY
2" HIGH STEEL FRAME FOR R48328 GRATE
4" HIGH STEEL FRAME FOR R48328 GRATE
6" CAP WITH FRAME CAST IN FLUSH FOR R48328 GRATE
6"
B
B
PLAN
BITUMASTIC COATING (IF REQUIRED)
INTERIOR
EXTERIOR
NONE REQ'D
RISER 6", 12", 18", 24", 36", 48"
1'-8"
2'-0"
2'-6"
6"
1"
SECTION A-A
3'-0"
2'-0"
6"
LIFT HOOK
4"
1'-8"
2'-0"
2'-6"
6"
1"
SECTION B-B
CODE: 315888 FRAME AND GRATE IN CAP OR RAISED STYLE TO BE USED.
CODE: 316888 WITH NEENAH R48328 GRATE OR EQUAL - HS-20-44 LOADING BICYCLE PROOF CAST IN FLUSH

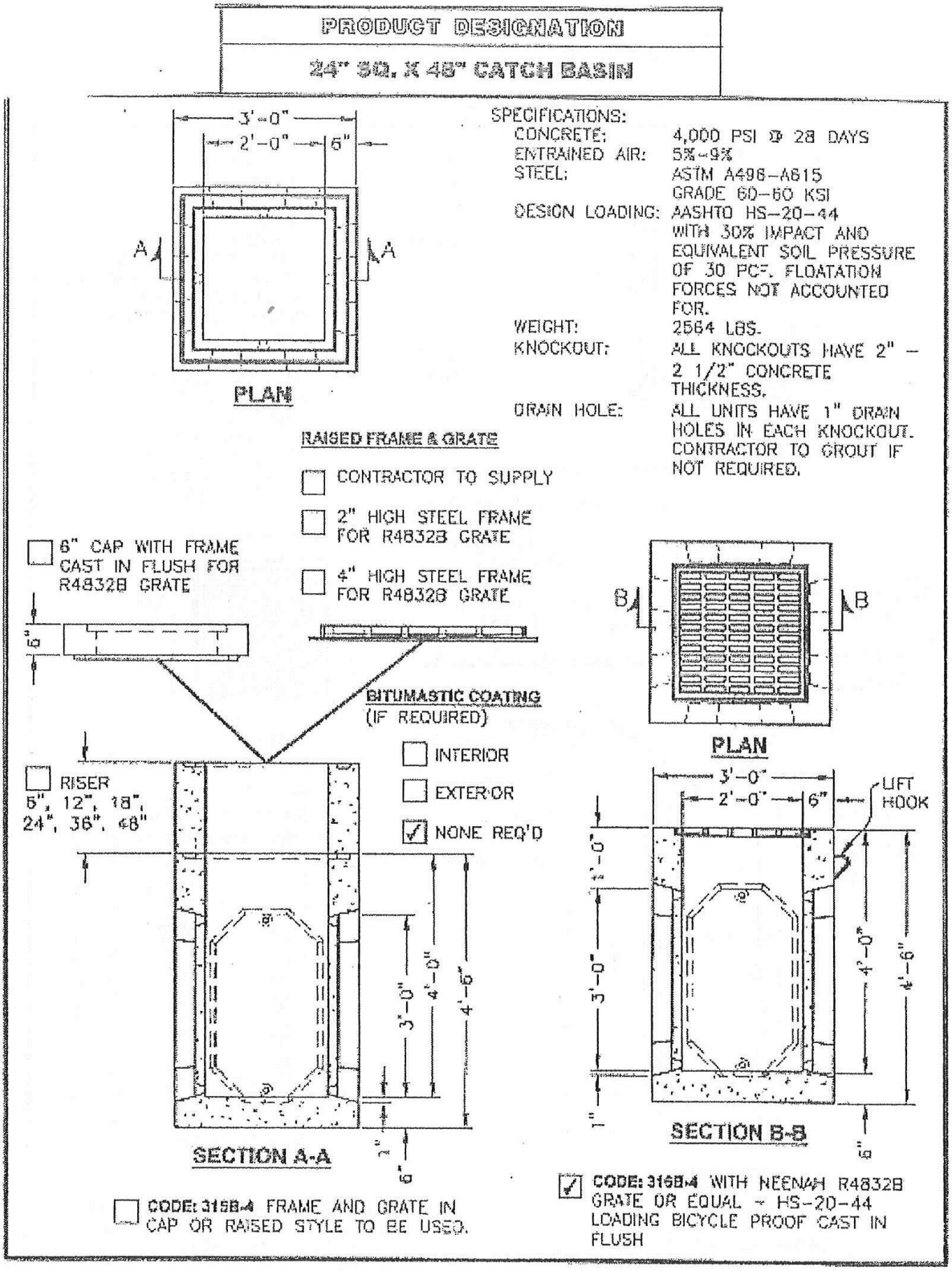
PRODUCT DESIGNATION
24" SQ. X 48" CATCH BASIN
3'-0"
2'-0"
6"
A
A
PLAN
SPECIFICATIONS:
CONCRETE: 4,000 PSI @ 28 DAYS
ENTRAINED AIR: 5%-9%
STEEL: ASTM A496-A615 GRADE 60-60 KSI
DESIGN LOADING: AASHTO HS-20-44 WITH 30% IMPACT AND EQUIVALENT SOIL PRESSURE OF 30 PCF. FLOATATION FORCES NOT ACCOUNTED FOR.
WEIGHT: 2564 LBS.
KNOCKOUT: ALL KNOCKOUTS HAVE 2" - 2 1/2" CONCRETE THICKNESS.
DRAIN HOLE: ALL UNITS HAVE 1" DRAIN HOLES IN EACH KNOCKOUT. CONTRACTOR TO GROUT IF NOT REQUIRED.
RAISED FRAME & GRATE
CONTRACTOR TO SUPPLY
2" HIGH STEEL FRAME FOR R4832B GRATE
4" HIGH STEEL FRAME FOR R4832B GRATE
6" CAP WITH FRAME CAST IN FLUSH FOR R4832B GRATE
6"
BITUMASTIC COATING (IF REQUIRED)
INTERIOR
EXTERIOR
NONE REQ'D
RISER 6", 12", 18", 24", 36", 48"
3'-0"
4'-0"
4'-6"
2"
6"
SECTION A-A
CODE: 3158-4 FRAME AND GRATE IN CAP OR RAISED STYLE TO BE USED.
B
B
PLAN
3'-0"
2'-0"
6"
LIFT HOOK
1'-0"
3'-0"
4'-0"
4'-6"
1"
6"
SECTION B-B
CODE: 3158-4 WITH NEENAH R4832B GRATE OR EQUAL - HS-20-44 LOADING BICYCLE PROOF CAST IN FLUSH

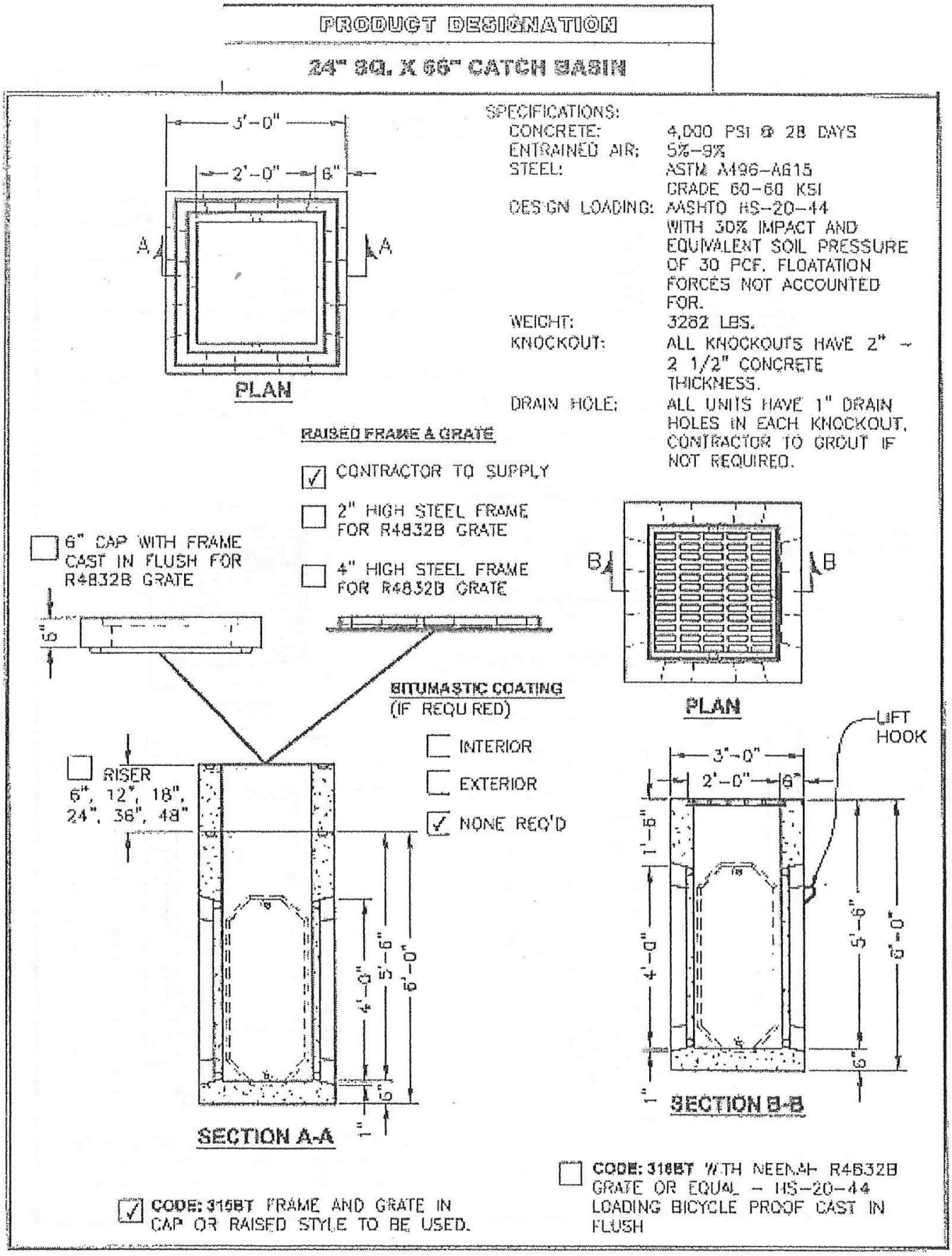
PRODUCT DESIGNATION
24" SQ. X 66" CATCH BASIN
5'-0"
2'-0"
6"
A
A
PLAN
SPECIFICATIONS:
CONCRETE: 4,000 PSI @ 28 DAYS
ENTRAINED AIR: 5%-9%
STEEL: ASTM A496-A615 GRADE 60-60 KSI
DESIGN LOADING: AASHTO HS-20-44 WITH 30% IMPACT AND EQUIVALENT SOIL PRESSURE OF 30 PCF. FLOATATION FORCES NOT ACCOUNTED FOR.
WEIGHT: 3282 LBS.
KNOCKOUT: ALL KNOCKOUTS HAVE 2" - 2 1/2" CONCRETE THICKNESS.
DRAIN HOLE: ALL UNITS HAVE 1" DRAIN HOLES IN EACH KNOCKOUT. CONTRACTOR TO GROUT IF NOT REQUIRED.
RAISED FRAME & GRATE
CONTRACTOR TO SUPPLY
2" HIGH STEEL FRAME FOR R4832B GRATE
4" HIGH STEEL FRAME FOR R4832B GRATE
6" CAP WITH FRAME CAST IN FLUSH FOR R4832B GRATE
6"
B
B
PLAN
BITUMASTIC COATING (IF REQUIRED)
INTERIOR
EXTERIOR
NONE REQ'D
RISER 6", 12", 18", 24", 36", 48"
4'-0"
5'-6"
6'-0"
6"
1"
SECTION A-A
LIFT HOOK
3'-0"
2'-0"
6"
1'-6"
4'-0"
5'-6"
6'-0"
6"
1"
SECTION B-B
CODE: 316BT FRAME AND GRATE IN CAP OR RAISED STYLE TO BE USED.
CODE: 316BT WITH NEENAH R4832B GRATE OR EQUAL - HS-20-44 LOADING BICYCLE PROOF CAST IN FLUSH

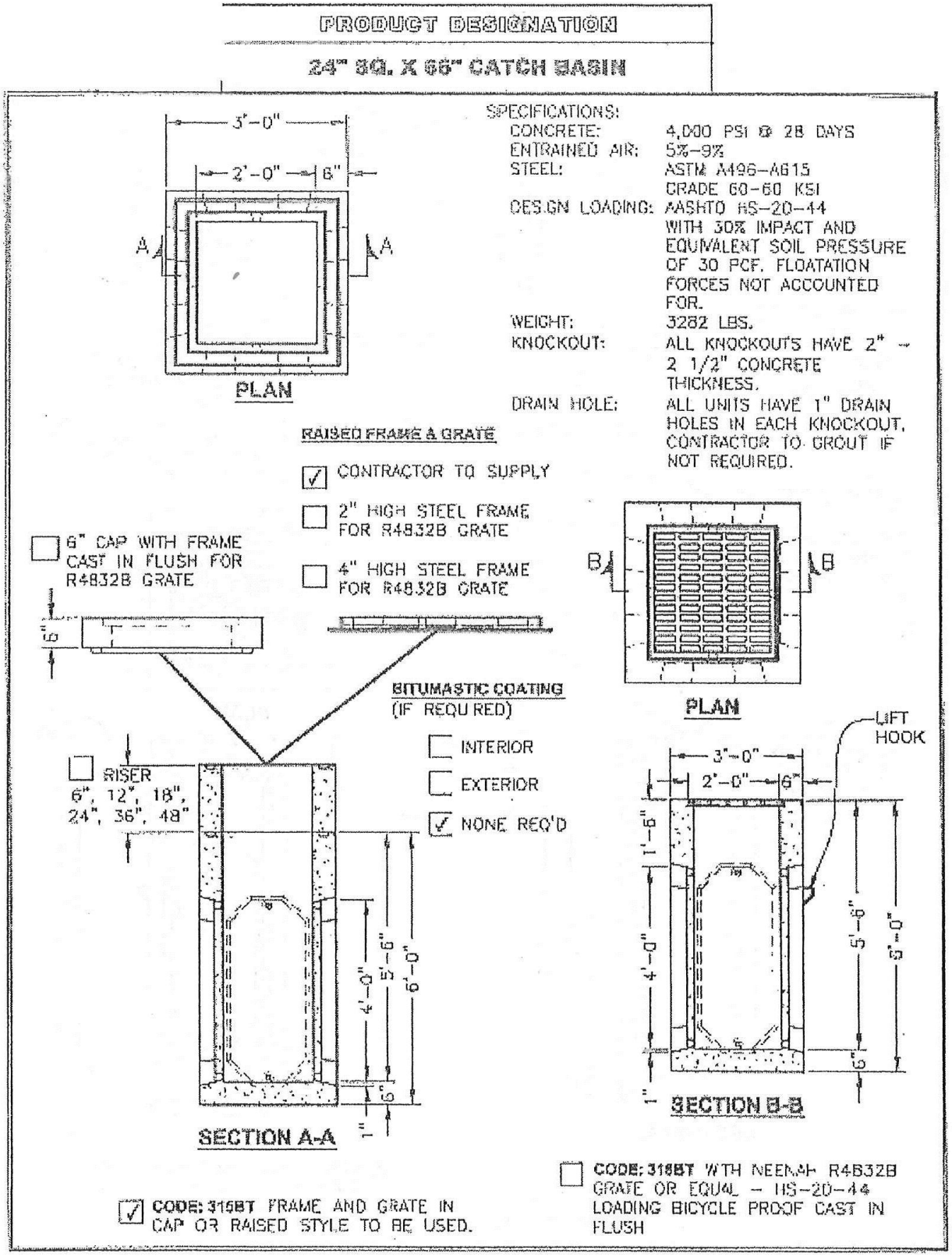
PRODUCT DESIGNATION
24" SQ. X 66" CATCH BASIN
SPECIFICATIONS:
CONCRETE: 4,000 PSI @ 28 DAYS
ENTRAINED AIR: 5%–9%
STEEL: ASTM A496–A615 GRADE 60–60 KSI
DESIGN LOADING: AASHTO HS–20–44 WITH 30% IMPACT AND EQUIVALENT SOIL PRESSURE OF 30 PCF. FLOATATION FORCES NOT ACCOUNTED FOR.
WEIGHT: 3282 LBS.
KNOCKOUT: ALL KNOCKOUTS HAVE 2" – 2 1/2" CONCRETE THICKNESS.
DRAIN HOLE: ALL UNITS HAVE 1" DRAIN HOLES IN EACH KNOCKOUT, CONTRACTOR TO GROUT IF NOT REQUIRED.
3'–0"
2'–0"
6"
A
A
PLAN
RAISED FRAME & GRATE
CONTRACTOR TO SUPPLY
2" HIGH STEEL FRAME FOR R4832B GRATE
4" HIGH STEEL FRAME FOR R4832B GRATE
6" CAP WITH FRAME CAST IN FLUSH FOR R4832B GRATE
6"
B
B
PLAN
BITUMASTIC COATING (IF REQUIRED)
INTERIOR
EXTERIOR
NONE REQ'D
RISER 6", 12", 18", 24", 36", 48"
4'–0"
5'–6"
6'–0"
6"
1"
SECTION A-A
LIFT HOOK
3'–0"
2'–0"
6"
1'–6"
4'–0"
5'–6"
6'–0"
6"
1"
SECTION B-B
CODE: 315BT FRAME AND GRATE IN CAP OR RAISED STYLE TO BE USED.
CODE: 318BT WITH NEENAH R4832B GRATE OR EQUAL – HS–20–44 LOADING BICYCLE PROOF CAST IN FLUSH

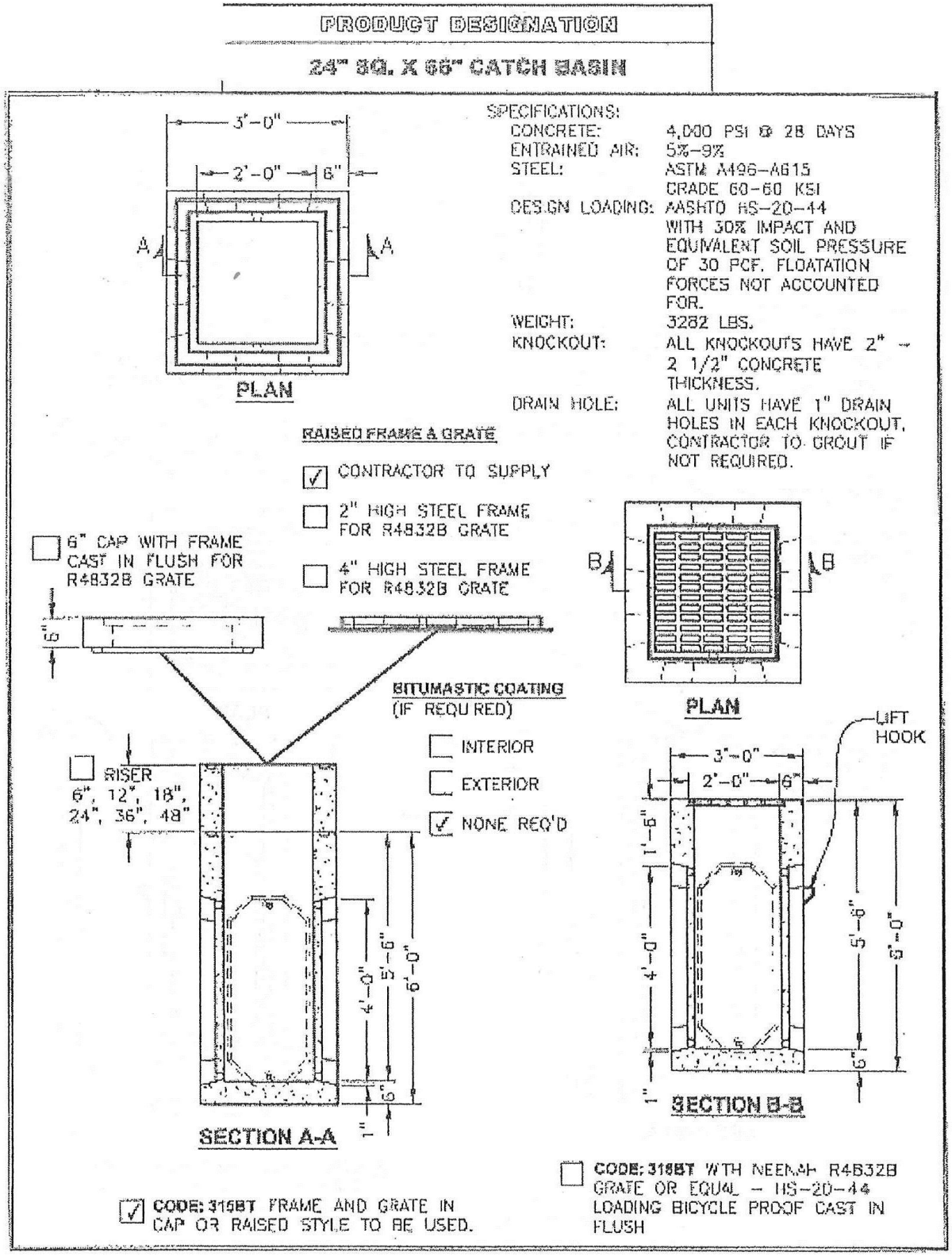
PRODUCT DESIGNATION
24" SQ. X 66" CATCH BASIN
3'-0"
2'-0"
6"
A
A
PLAN
SPECIFICATIONS:
CONCRETE: 4,000 PSI @ 28 DAYS
ENTRAINED AIR: 5%-9%
STEEL: ASTM A496-A615 GRADE 60-60 KSI
DESIGN LOADING: AASHTO HS-20-44 WITH 30% IMPACT AND EQUIVALENT SOIL PRESSURE OF 30 PCF. FLOATATION FORCES NOT ACCOUNTED FOR.
WEIGHT: 3282 LBS.
KNOCKOUT: ALL KNOCKOUTS HAVE 2" - 2 1/2" CONCRETE THICKNESS.
DRAIN HOLE: ALL UNITS HAVE 1" DRAIN HOLES IN EACH KNOCKOUT. CONTRACTOR TO GROUT IF NOT REQUIRED.
RAISED FRAME & GRATE
CONTRACTOR TO SUPPLY
2" HIGH STEEL FRAME FOR R4832B GRATE
4" HIGH STEEL FRAME FOR R4832B GRATE
6" CAP WITH FRAME CAST IN FLUSH FOR R4832B GRATE
6"
B
B
PLAN
BITUMASTIC COATING (IF REQUIRED)
INTERIOR
EXTERIOR
NONE REQ'D
RISER 6", 12", 18", 24", 36", 48"
4'-0"
5'-6"
6'-0"
6"
1"
SECTION A-A
LIFT HOOK
3'-0"
2'-0"
6"
1'-6"
4'-0"
5'-6"
6'-0"
6"
1"
SECTION B-B
CODE: 315BT FRAME AND GRATE IN CAP OR RAISED STYLE TO BE USED.
CODE: 318BT WITH NEENAH R4832B GRATE OR EQUAL – HS-20-44 LOADING BICYCLE PROOF CAST IN FLUSH

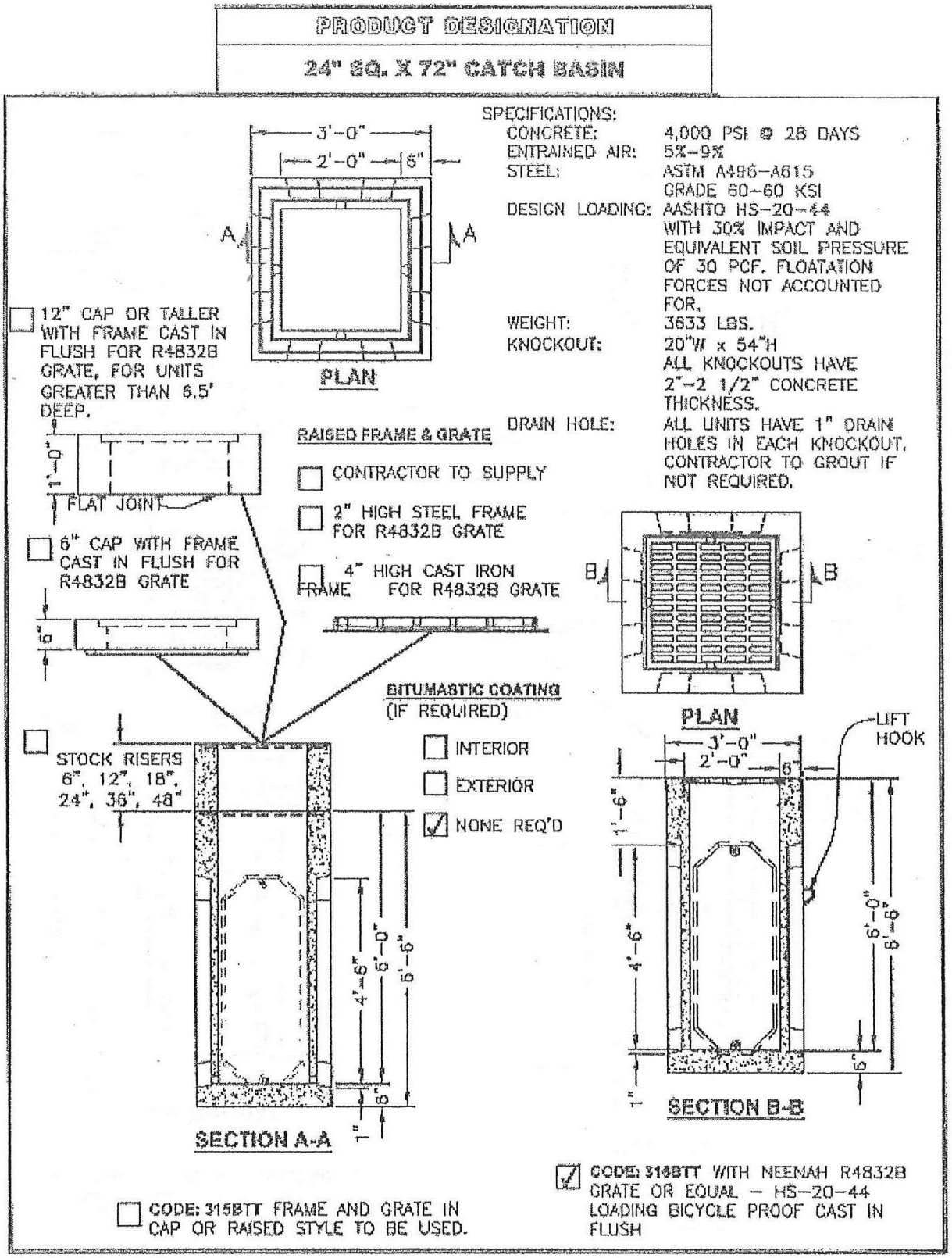
PRODUCT DESIGNATION
24" SQ. X 72" CATCH BASIN
SPECIFICATIONS:
CONCRETE: 4,000 PSI @ 28 DAYS
ENTRAINED AIR: 5%-9%
STEEL: ASTM A496-A615 GRADE 60-60 KSI
DESIGN LOADING: AASHTO HS-20-44 WITH 30% IMPACT AND EQUIVALENT SOIL PRESSURE OF 30 PCF. FLOATATION FORCES NOT ACCOUNTED FOR.
WEIGHT: 3633 LBS.
KNOCKOUT: 20"W x 54"H ALL KNOCKOUTS HAVE 2"-2 1/2" CONCRETE THICKNESS.
DRAIN HOLE: ALL UNITS HAVE 1" DRAIN HOLES IN EACH KNOCKOUT. CONTRACTOR TO GROUT IF NOT REQUIRED.
3'-0"
2'-0"
6"
A
A
PLAN
12" CAP OR TALLER WITH FRAME CAST IN FLUSH FOR R4832B GRATE, FOR UNITS GREATER THAN 6.5' DEEP.
1'-0"
FLAT JOINT
6" CAP WITH FRAME CAST IN FLUSH FOR R4832B GRATE
6"
RAISED FRAME & GRATE
CONTRACTOR TO SUPPLY
2" HIGH STEEL FRAME FOR R4832B GRATE
4" HIGH CAST IRON FRAME FOR R4832B GRATE
B
B
PLAN
BITUMASTIC COATING (IF REQUIRED)
INTERIOR
EXTERIOR
NONE REQ'D
STOCK RISERS 6", 12", 18", 24", 36", 48"
4'-6"
5'-0"
5'-6"
6"
1"
SECTION A-A
LIFT HOOK
3'-0"
2'-0"
6"
1'-6"
4'-6"
5'-0"
5'-6"
6"
1"
SECTION B-B
CODE: 315BTT FRAME AND GRATE IN CAP OR RAISED STYLE TO BE USED.
CODE: 316BTT WITH NEENAH R4832B GRATE OR EQUAL – HS-20-44 LOADING BICYCLE PROOF CAST IN FLUSH

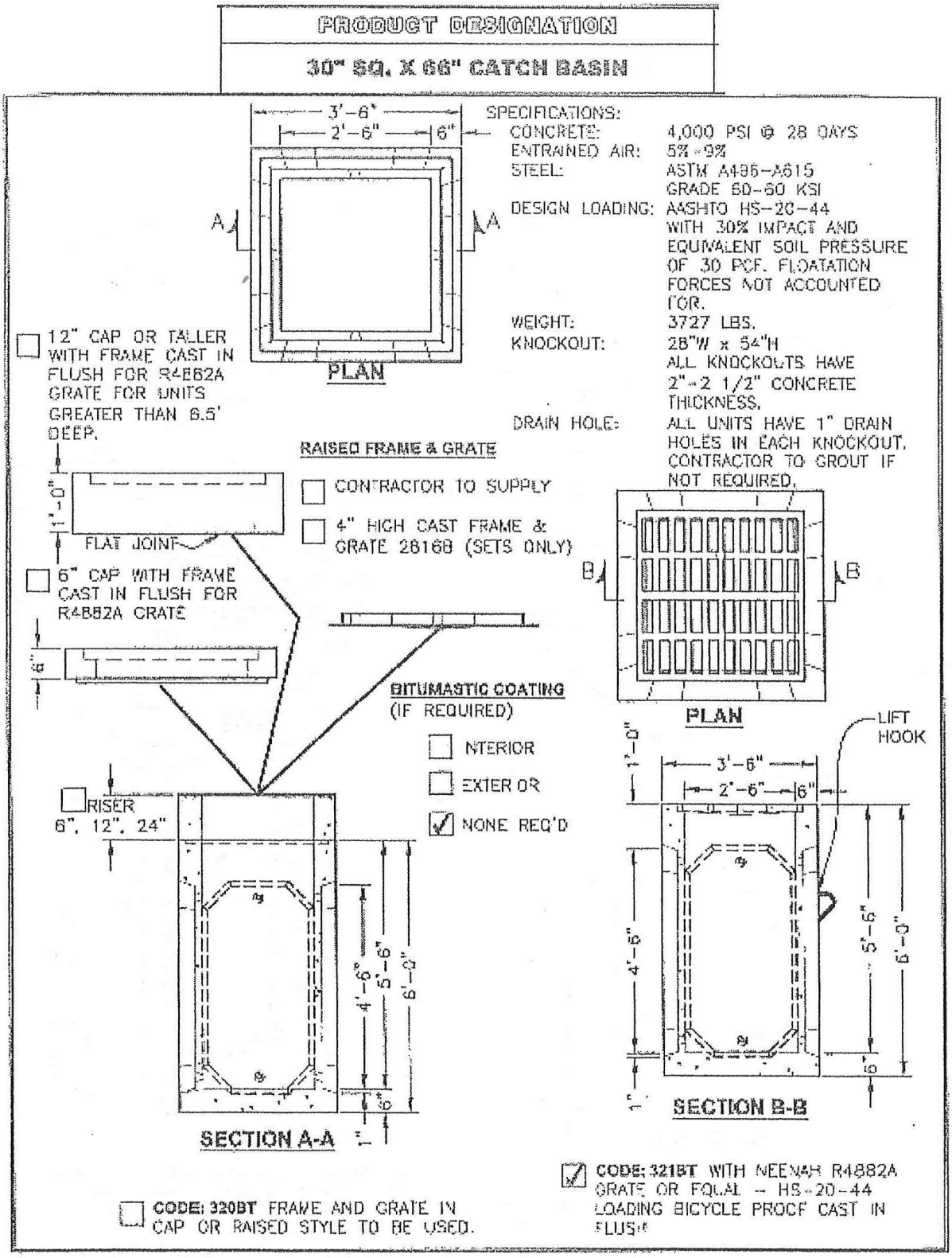
PRODUCT DESIGNATION
30" SQ. X 66" CATCH BASIN
3'-6"
2'-6"
6"
A
A
PLAN
SPECIFICATIONS:
CONCRETE: 4,000 PSI @ 28 DAYS
ENTRAINED AIR: 5% - 9%
STEEL: ASTM A496-A615 GRADE 60-60 KSI
DESIGN LOADING: AASHTO HS-20-44 WITH 30% IMPACT AND EQUIVALENT SOIL PRESSURE OF 30 PCF. FLOATATION FORCES NOT ACCOUNTED FOR.
WEIGHT: 3727 LBS.
KNOCKOUT: 28"W x 54"H ALL KNOCKOUTS HAVE 2" - 2 1/2" CONCRETE THICKNESS.
DRAIN HOLE: ALL UNITS HAVE 1" DRAIN HOLES IN EACH KNOCKOUT. CONTRACTOR TO GROUT IF NOT REQUIRED.
12" CAP OR TALLER WITH FRAME CAST IN FLUSH FOR R4882A GRATE FOR UNITS GREATER THAN 6.5' DEEP.
RAISED FRAME & GRATE
CONTRACTOR TO SUPPLY
4" HIGH CAST FRAME & GRATE 28168 (SETS ONLY)
1'-0"
FLAT JOINT
6" CAP WITH FRAME CAST IN FLUSH FOR R4882A GRATE
6"
BITUMASTIC COATING (IF REQUIRED)
INTERIOR
EXTERIOR
NONE REQ'D
B
B
PLAN
LIFT HOOK
RISER 6", 12", 24"
4'-6"
5'-6"
6'-0"
SECTION A-A
1'-0"
3'-6"
2'-6"
6"
4'-6"
5'-6"
6'-0"
6"
1"
SECTION B-B
CODE: 320BT FRAME AND GRATE IN CAP OR RAISED STYLE TO BE USED.
CODE: 321BT WITH NEENAH R4882A GRATE OR EQUAL – HS-20-44 LOADING BICYCLE PROOF CAST IN FLUSH

STANDARD MANHOLE STEP

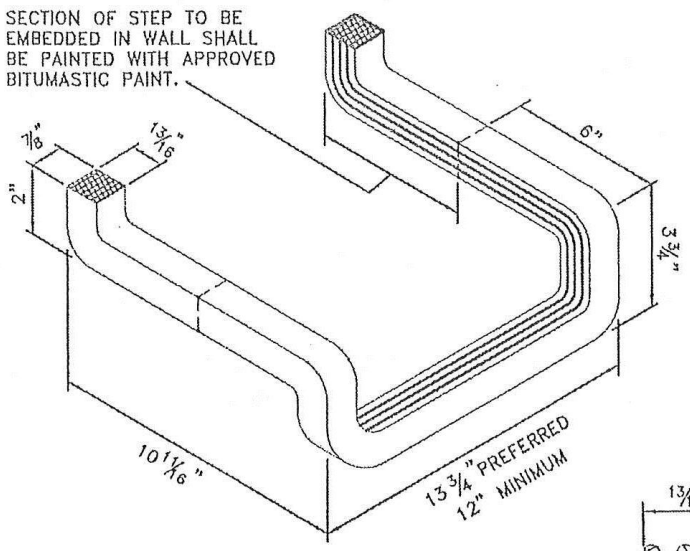

(DROP FRONT TYPE)

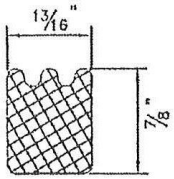

TYPICAL SECTION

NOTES:

1. MANHOLE STEPS SHALL BE OF FORGED ALUMINUM ALLOY.
2. AN ACCEPTABLE ALTERNATE IS THE STEEL REINFORCED COPOLYMER POLYPROPYLENE MANHOLE STEP.
3. THE STEPS SHALL BE EMBEDDED IN THE WALLS OF THE CONCRETE PIPE BARREL WHILE THE PIPE IS BEING CAST OR SECURELY GROUTED IN PLACE AFTER CASTING.

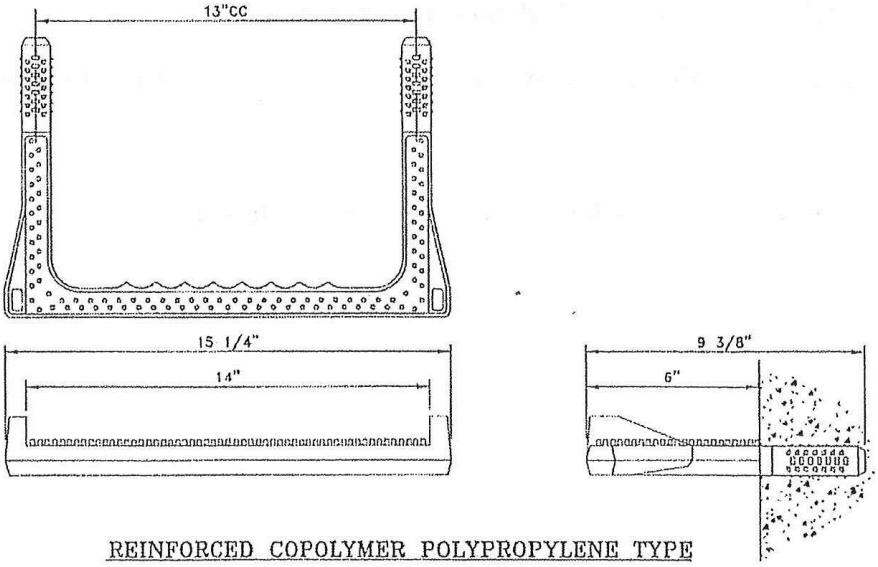

REINFORCED COPOLYMER POLYPROPYLENE TYPE

ERIE COUNTY **DEPT. OF ENVIRONMENT & PLANNING** **DIVISION OF SEWERAGE MANAGEMENT**	**Rev. 1** 12/9/96	ADDED REINFORCED COLPOLYMER TYPE STEP	**STD.DETAIL**
	Rev. 2		17
	File: d-17	**Date: 3/1/91**	

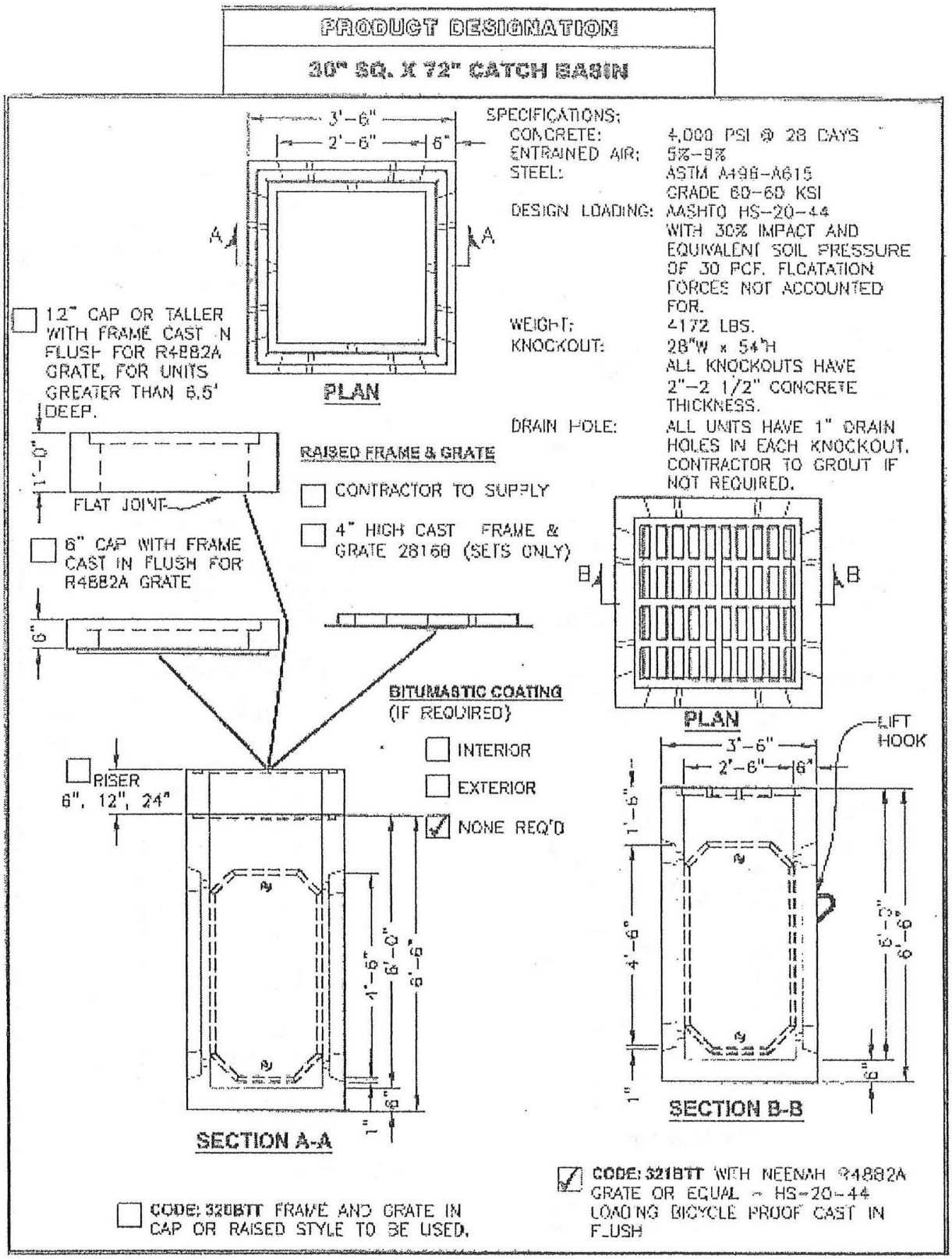
PRODUCT DESIGNATION
30" SQ. X 72" CATCH BASIN
3'-6"
2'-6"
6"
A
A
PLAN
SPECIFICATIONS:
CONCRETE: 4,000 PSI @ 28 DAYS
ENTRAINED AIR: 5%-9%
STEEL: ASTM A498-A615 GRADE 60-60 KSI
DESIGN LOADING: AASHTO HS-20-44 WITH 30% IMPACT AND EQUIVALENT SOIL PRESSURE OF 30 PCF. FLOATATION FORCES NOT ACCOUNTED FOR.
WEIGHT: 4172 LBS.
KNOCKOUT: 28"W x 54"H ALL KNOCKOUTS HAVE 2"-2 1/2" CONCRETE THICKNESS.
DRAIN HOLE: ALL UNITS HAVE 1" DRAIN HOLES IN EACH KNOCKOUT. CONTRACTOR TO GROUT IF NOT REQUIRED.
12" CAP OR TALLER WITH FRAME CAST IN FLUSH FOR R4882A GRATE, FOR UNITS GREATER THAN 6.5' DEEP.
1'-0"
FLAT JOINT
RAISED FRAME & GRATE
CONTRACTOR TO SUPPLY
4" HIGH CAST FRAME & GRATE 28168 (SETS ONLY)
6" CAP WITH FRAME CAST IN FLUSH FOR R4882A GRATE
6"
B
B
PLAN
BITUMASTIC COATING (IF REQUIRED)
INTERIOR
EXTERIOR
NONE REQ'D
RISER 6", 12", 24"
LIFT HOOK
3'-6"
2'-6"
6"
1'-6"
4'-6"
6'-0"
6'-6"
1"
SECTION A-A
SECTION B-B
CODE: 320BTT FRAME AND GRATE IN CAP OR RAISED STYLE TO BE USED.
CODE: 321BTT WEH NEENAH R4882A GRATE OR EQUAL - HS-20-44 LOADING BICYCLE PROOF CAST IN FLUSH

SECTION E605 – UNDERDRAINS

Section 605 of the NYSDOT Standard Specifications dated May 1, 2008, and all addenda shall apply except as modified herein.

605-5 BASIS OF PAYMENT:

605-5.01 General. The unit price bid per foot shall include the cost of all materials furnished and delivered only. NOT installed. All materials shall be F.O.B. to location designated by the ordering agency.

Payment will be made under:

Item No.	Item	Pay Unit
E605.1504	Perforated Corrugated Polyethylene Underdrain Tubing, 4-in. dia.	Foot
E605.150401	Perforated Corrugated Polyethylene Underdrain Tubing, Coupling, 4-in. dia.	Each
E605.1506	Perforated Corrugated Polyethylene Underdrain Tubing, 6-in. dia.	Foot
E605.150601	Perforated Corrugated Polyethylene Underdrain Tubing, Coupling, 6-in. dia.	Each
E605.1508	Perforated Corrugated Polyethylene Underdrain Tubing, 8-in. dia.	Foot
E605.150801	Perforated Corrugated Polyethylene Underdrain Tubing, Coupling, 8-in. dia.	Each
E605.1510	Perforated Corrugated Polyethylene Underdrain Tubing, 10-in. dia.	Foot
E605.151001	Perforated Corrugated Polyethylene Underdrain Tubing, Coupling, 10-in. dia.	Each
E605.981012	Underdrains - Corrugated Polyethylene Underdrain Pipe, 12-in.	Foot
E605.981112	Underdrains - Corrugated Polyethylene Underdrain Pipe – Coupling, 12-in.	Each
E605.981015	Underdrains - Corrugated Polyethylene Underdrain Pipe, 15-in.	Foot
E605.981115	Underdrains - Corrugated Polyethylene Underdrain Pipe – Coupling, 15-in.	Each
E605.981018	Underdrains - Corrugated Polyethylene Underdrain Pipe, 18-in.	Foot
E605.981118	Underdrains - Corrugated Polyethylene Underdrain Pipe – Coupling, 18-in.	Each
E605.981024	Underdrains - Corrugated Polyethylene Underdrain Pipe, 24-in.	Foot
E605.981124	Underdrains - Corrugated Polyethylene Underdrain Pipe – Coupling, 24-in.	Each

SECTION E606 – GUIDE RAILING, MEDIAN BARRIER, AND CONCRETE BARRIER

E606-1 DESCRIPTION. The NYSDOT Standard Specifications and Standard Sheets for Section 606 shall apply except as amended herein.

Contractors are advised to bid on all guide rail and related items including but not limited to Guide Rail Removal, Windrow excavation and disposal and paving of mowing strips. Determination of low bidder for a particular guide rail project shall be made with consideration of all work items involved. Items containing the prefix E are special Erie County items. Items containing the suffix U are used guide rail materials, which may be proposed for use by the Contractor subject to the approval of the County.

Note: The Contractor's attention is directed to Section 587 of these bid items for the following two items: Item 587.1 002M-BOX BEAM BRIDGE RAIL, TWO RAIL (furnished & Installed) (Various Locations in Erie County, and Item 587.1002M -BOX BEAM BRIDGE RAIL, TWO RAIL (Furnished Only).

Item E203.99 Windrow Excavation and Removal. Under this item the Contractor shall remove windrows up to 2 feet high and regrade shoulders to a uniform grade and slope, A.O.B.E., Disposal of excavated materials shall be offsite; the County will make its maintenance facilities available for disposal. Payment will be made per square yard graded.

Item E606.10 Box Beam Guide Railing (Furnish Only). The requirements for this Item are the same as 606.10 but do not include installation. The unit price bid shall be per linear foot based upon 6' post spacing, with payment as specified on Table 606-2 of the New York State Specifications to include all costs of furnishing and delivering the material to any point in Erie County.

Item 606.100002 Box Beam Guide Railing (Shop Bent or Shop Mitered) (Furnish & Install). The NYSDOT Standard Specifications for Item 606.100002 shall apply.

Item E606.100002 Box Beam Guide Railing (Shop Bent or Shop Mitered) (Furnish Only). The requirements for this Item are the same as 606.100002, but do not include installation. The unit price bid shall be per linear foot based upon 6 ft. post spacing, with payment as specified on Table 606-2 of the NYSDOT Standard Specifications to include all costs of furnishing and delivering the material to any point in Erie County.

Item 606.1010 Box Beam Guide Railing (Furnished and Installed, various locations in Erie County).

Item 606.120102 Box Beam Guide Railing End Assembly Type I (Furnish & Install). The NYSDOT Standard Specifications for Item 606.120102 shall apply.

Item E606.120102 Box Beam Guide Railing End Assembly Type I (Furnish Only). The requirements for this Item are the same as 606.1201M, but less installation. The unit price bid shall be per unit including all costs of furnishing and delivering material to any point in Erie County.

Item 606.120201 Box Beam Guide Railing End Assembly Type IIA (Furnish & Install). The NYSDOT Standard Specifications for Item 606.120201 shall apply.

Item E606.120201 Box Beam Guide Railing End Assembly Type IIA (Furnish Only). The requirements for this item are the same as 606.120201 but less installation. The unit price bid

shall be per unit including all costs of furnishing and delivering material to any point in Erie County.

Item E606.16xx Corrugated Beam Guide Railing (Furnish & Install). The NYSDOT Standard Specifications for Item 606.16 shall apply except as follows. The bid price per foot shall include all posts and hardware required for a 12'-6" post spacing. If the post spacing is not 12'-6" then the payment factors in Table 606-2 will apply.

Item E606.1605 Corrugated Beam Guide Railing (Furnish Only). The NYSDOT Standard Specifications for Item 606.16 shall apply except that no installation is required and as follows. The bid price per foot shall include all posts and hardware required for a 12'-6" post spacing. If the post spacing is not 12'-6" then the payment factors in Table 606-2 will apply. The unit price bid shall be per unit including all costs of furnishing and delivering material to any point in Erie County.

Item 606.22 - Anchorage Units for Corrugated Beam Guide Railing (Furnish & Install). The NYSDOT Standard Specifications for Item 606.22 shall apply.

Item E606.23xx Heavy Post Blocked-Out Corrugated Beam Guide Railing (Furnished and Installed, various locations in Erie County). The New York State Department of Transportation Standard Sheet M606-8R3 and M606-9R2 shall apply. The bid price per foot shall include all posts and hardware required for a 6’-3” post spacing. If the post spacing is not 6’-3” then the payment factors in Table 606-2 will apply.

Item 606.23 Anchorage Units for Corrugated Beam Guide Railing (Driveways, Walkways and Other Openings) (Furnish & Install). The NYSDOT Standard Specifications for Item 606.23 shall apply.

Item 606.2701 HPBO (Mod.) Corrugated Beam Guide Railing (Furnish & Install). The NYSDOT Standard Specifications for Item 606.2701 shall apply except as follows. The bid price per foot shall include all posts and hardware for a 6'-3" post spacing. If the post spacing is not 6'-3" then the payment factors in Table 606-2 will apply.

Item 606.2703 Anchorage Units For HPBO (Mod.) Corrugated Beam Guide Railing (Furnish & Install). The NYSDOT Standard Specifications for Item 606.2703 shall apply.

Item E606.36 Heavy Post Blocked-Out Corrugated Beam Guide Railing Connections to Walls Trailing Ends (Furnished and Installed, various locations in Erie County).

Item E606.47 Guide Posts (Wood) (Furnish Only). As required in Section 710-13 of the New York State Standard Specifications.

Item E606.4805 I-Beam Posts for Existing Corrugated Beam Guide Railing (Furnish Only). The unit price bid shall be per each for guide posts (Metal S3 x 5.7, length 5' 3") including accessory hardware such as nuts, bolts and washers necessary for assembly to railing and including all costs of furnishing and delivering the material to any point within Erie County.

Item E606.480501 I-Beam Post Installations for Corrugated Beam Guide Railing (No Railing or Post Included). The unit price bid shall be per each S3 x 5.7, length 5'3" post at a specific job site installed within 30 days of order date.

Item E606.480502 I-Beam Post Installations for Corrugated Beam Guide Railing (Post Only Included). The unit price bid shall be per each S3 x 5.7, length 5'3" post at a specific job site furnished and installed within 30 days of order date.

Item E606.4818 I-Beam Posts for Existing HPBO (Mod.) Corrugated Beam Guide Railing (Furnish & Install). The NYSDOT Standard Specifications for Item 606.4818 shall apply.

Item E606.5148xx Resetting Corrugated Beam Guide Railing (New Posts) (Furnish & Install). The NYSDOT Standard Specifications for Item 606.5148 shall apply. The Bid Price per Foot shall include all required posts and hardware for a 12'-6" post spacing. If the post spacing is not 12'-6" then the payment factors in Table 606-2 will apply.

Item E606.55xx Resetting heavy Post Blocked-Out Corrugated Beam Guide Railing (Resetting at various locations in Erie County). The bid price per foot shall include all posts and hardware required for a 6'-3" post spacing. If the post spacing is not 6'-3" then the payment factors in Table 606-2 will apply.

Item E606.5501 Resetting HPBO Corrugated Beam Guide Railing (New 12 in. Blockouts). The NYSDOT Standard Specifications for Item 606.5501 shall apply. The Bid Price per Foot shall include all posts and hardware required for a 6'-3" post spacing. If the post spacing is not 6'-3" then the payment factors in Table 606-2 will apply.

Item E606.550101 Resetting HPBO Corrugated Beam Guide Railing (Heavy Posts & Block·Outs Furnished by Others). The NYSDOT Standard Specifications for Item 606.5501 shall apply except that Heavy Posts and Block-Outs shall be supplied by Others. All required labor, hardware and equipment shall be included in the Bid Price per Foot.

Item E606.56xx Resetting Corrugated beam Guide Railing Heavy Posts and Block-Outs (Furnished by others, resetting at various locations in Erie County). The bid price per foot shall include all heavy posts, block-outs and hardware.

Item 606.5910 Resetting Anchorage Units For Corrugated Beam Guide Railing Or Median Barrier. The NYSDOT Standard Specifications for Item 606.5910 shall apply.

Item E606.9901 Channel Back Up for Corrugated Beam Guide Rail (Furnish & Install). Channel material shall consist of C9X20 members or an approved equal.

Item E606.9902 Attachments for HPBO Corrugated Beam with Back Up (Furnish & Install). Attachments shall be furnished and installed to fasten Heavy Post Blocked-Out Corrugated Beam with Channel to Bridge Railing. Attachments are for the plate girder stiffeners, the Bridge Railing, or the truss members.

Item E606.9903 - Bridge Post Modification - HPBO Corrugated Beam Guide Railing (Furnish & Install). Refer to the Bridge Post Modification detail on the next sheet.

Item E606.9904 - Corrugated Beam Transition Assembly -Four Rail Steel Bridge Railing Including Sleeved Tuning Fork (Furnish Only). Refer to the Bridge Post Modification detail on the next sheet.

Item E606.9905 Guide Rail Removal: Under this item the Contractor shall remove and dispose of guide rail and posts of all types. Payment will be made per lineal foot of rail removed.

SECTION E606 – GUIDE RAILING, MEDIAN BARRIER, AND CONCRETE BARRIER

Item E608.0201 Asphalt Concrete Mowing Strips: Under this item the Contractor shall furnish and install 2 inches of Type 3 Fine Binder 3 feet wide centered under the proposed guide rail. Binder will be placed on a prepared earth subgrade. Removal of topsoil and grading of the earth subgrade is included in this item. Payment will be made per ton installed.

Item E619.9901 Maintenance and Protection of Traffic for Guide Rail Operations. Under this item the Contractor shall maintain and protect traffic from the time operations begin until the new guide rail installation is complete and accepted. Signs, lights, barrels and barricades shall be furnished installed, moved and removed as required. Payment will be made per lineal foot of guide rail installation.

NOTE:

The final award for the Guide Railing will be based on those bids that provide the lowest cost for total assembled unit. Should one firm's bid for end assemblies, for example, be higher but the railing bid lower, resulting in the lowest total cost, that firm may receive the bid for both items, as a total assembled unit.

All guide rail items listed herein are intended to be used for repair at various locations or installations at one or more locations on road reconstruction projects twelve months of the year. Contact the Erie County Highway Division with any questions regarding materials or detail.

Payment shall be made under:

Item No.	Item	Pay Unit
E203.99	Windrow Excavation & Removal	SY Graded
E606.10	Box Beam Guide Railing (Furnish Only)	LF
606.100002	Box Beam Guide Railing (Shop Bent or Shop Mitered) (Furnish and Install)	LF
E606.100002	Box Beam Guide Railing (Shop Bent or Shop Mitered) (Furnish Only)	LF
E606.1010	Box Beam Guide Railing (Furnished and Installed, various locations in Erie County).	LF
606.120102	Box Beam Guide Railing End Assembly Type I (Furnish & Install)	EA
E606.120102	Box Beam Guide Railing End Assembly Type I (Furnish Only)	EA
606.120201	Box Beam Guide Railing End Assembly Type IIA (Furnish & Install)	EA
E606.120201	Box Beam Guide Railing End Assembly Type IIA (Furnish Only)	EA
E606.1601	Corrugated Beam Guide Railing (Furnished & Installed) 1' - 100'	LF
E606.1602	Corrugated Beam Guide Railing (Furnished & Installed) 101' - 500'	LF
E606.1603	Corrugated Beam Guide Railing (Furnished & Installed) 501' - 1000'	LF
E606.1604	Corrugated Beam Guide Railing (Furnished & Installed) 1001' - 5000'	LF
E606.1605	Corrugated Beam Guide Railing (Furnish Only)	LF
606.22	Anchorage Units for Corrugated Beam Guide Railing (Furnish & Install)	EA
606.23	Anchorage Units for Corrugated Beam Guide Railing (Driveways, Walkways and Other Openings) (Furnish & Install)	EA
E606.2301	Heavy Post Blocked-Out Corrugated Beam Guide Railing (Furnished and installed, various locations in Erie County) 1'-100'	LF

Item No.	Item	Pay Unit
E606.2302	Heavy Post Blocked-Out Corrugated Beam Guide Railing (Furnished and installed, various locations in Erie County) 101’-500’	LF
E606.2303	Heavy Post Blocked-Out Corrugated Beam Guide Railing (Furnished and installed, various locations in Erie County) 501’-1,000’	LF
E606.2304	Heavy Post Blocked-Out Corrugated Beam Guide Railing (Furnished and installed, various locations in Erie County) 1,001’-5,000’	LF
606.2701	HPBO (Mod.) Corrugated Beam Guide Railing (Furnish & Install)	LF
606.2703	Anchorage Units for HPBO (Mod.) Corrugated Beam Guide Railing (Furnish & Install)	Each
E606.36	Heavy Post Blocked-Out Corrugated Beam Guide Railing Connections to Walls Trailing Ends (Furnished and Installed, various locations in Erie County).	Each
E606.47	Guide Posts (Wood) (Furnish Only)	Each
E606.4805	I-Beam Posts for Existing Corrugated Beam Guide Railing (Furnish Only)	Each
E606.480501	I-Beam Post Installations for Corrugated Beam Guide Railing (No Railing or Post Included)	Each
E606.480502	I-Beam Post Installations for Corrugated Beam Guide Railing (Post Only Included)	Each
E606.4818	I-Beam Posts for Existing HPBO (Mod.) Corrugated Beam Guide Railing (Furnish & Install)	Each
E606.514801	Resetting Corrugated Beam Guide Railing (New Posts) 1'-100'	LF
E606.514802	Resetting Corrugated Beam Guide Railing (New Posts) 101'-500'	LF
E606.514803	Resetting Corrugated Beam Guide Railing (New Posts) Over 500 ft.	LF
E606.5501	Resetting HPBO Corrugated Beam Guide Railing (New 12 in. Blockouts)	LF
E606.550101	Resetting HPBO Corrugated Beam Guide Railing (Heavy Posts and Blockouts Furnished by Others)	LF
E606.550102	Resetting Heavy Post Blocked-Out Corrugated Beam Guide Railing (Resetting at various locations in Erie County)1’-100’	LF
E606.550103	Resetting Heavy Post Blocked-Out Corrugated Beam Guide Railing (Resetting at various locations in Erie County)101’-500’	LF
E606.550104	Resetting heavy Post Blocked-Out Corrugated Beam Guide Railing (Resetting at various locations in Erie County) 501’-1,000’	LF
E606.550105	Resetting Heavy Post Blocked-Out Corrugated Beam Guide Railing (Resetting at various locations in Erie County)1,001’-5,000’	LF
E606.5601	Resetting Corrugated beam Guide Railing Heavy Posts and Block-Outs (Furnished by others, resetting at various locations in Erie County) 1’-100’	LF
E606.5602	Resetting Corrugated beam Guide Railing Heavy Posts and Block-Outs (Furnished by others, resetting at various locations in Erie County) 101’-500’	LF

Item No.	Item	Pay Unit
E606.5603	Resetting Corrugated beam Guide Railing Heavy Posts and Block-Outs (Furnished by others, resetting at various locations in Erie County) 501'-1,000'	LF
E606.5604	Resetting Corrugated beam Guide Railing Heavy Posts and Block-Outs (Furnished by others, resetting at various locations in Erie County) 1,001'-5,000'	LF
606.5910	Resetting Anchorage Units for Corrugated Beam Guide Railing or Median Barrier	EA
E606.9901	Channel Back Up for Corrugated Beam Guide Rail (Furnish & Install)	LF
E606.9902	Attachments for HPBO Corrugated Beam w/Back Up (Furnish & Install)	Each
E606.9903	Bridge Post Modification - HPBO Corrugated Beam Guide Railing (Furnish & Install)	LF
E606.990401	Corrugated Beam Transition Assembly - Four Rail Steel Bridge Railing Including Sleeved Tuning Fork (Furnish Only)	LF
E606.9905	Guiderail Removal	LF
E608.0201	Asphalt Concrete Mowing Strips	Ton
E619.9901	Maintenance & Protection of Traffic	LF

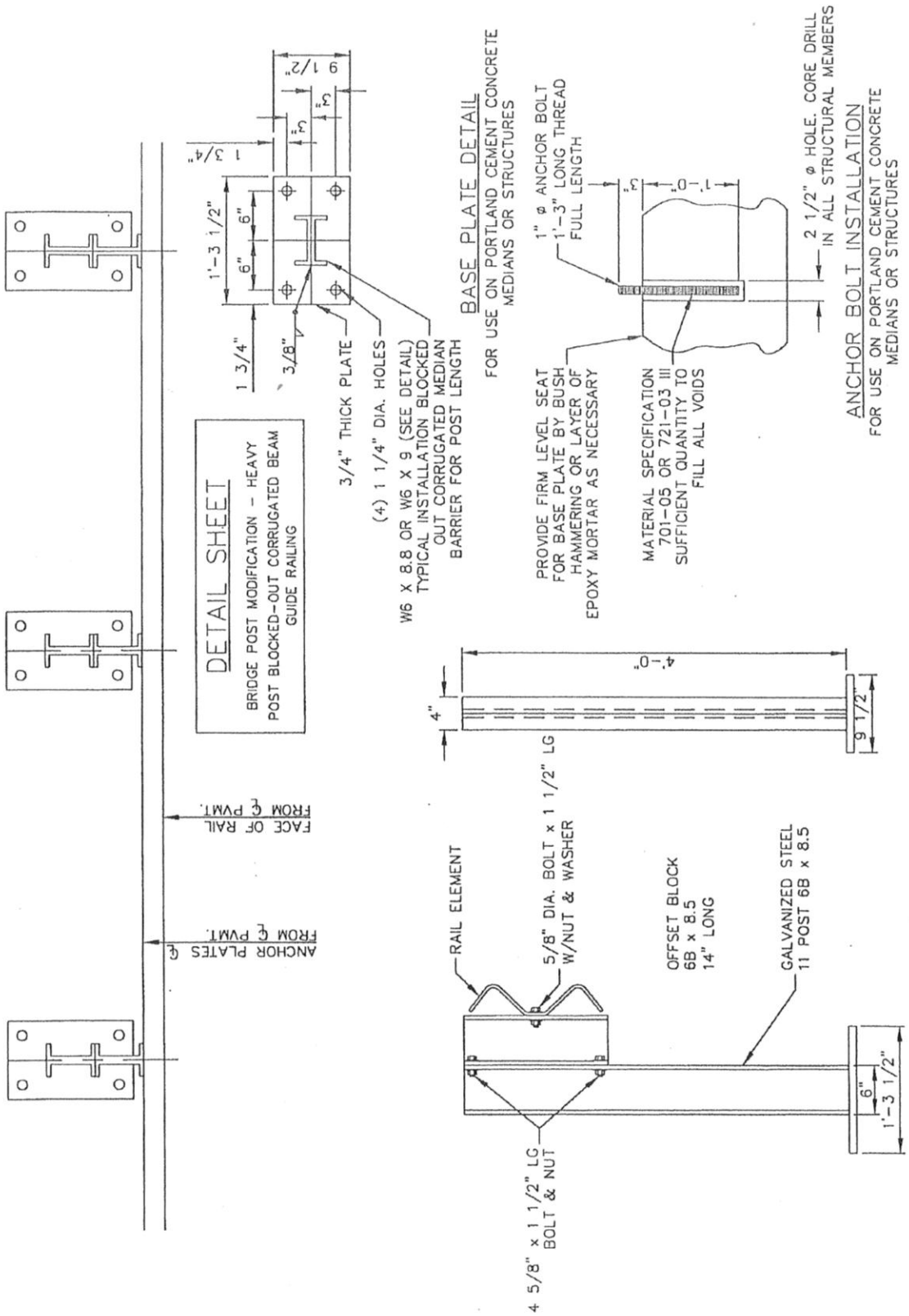

E606.9903 - BRIDGE POST MODIFICATION - HEAVY POST BLOCKED-OUT CORRUGATED BEAM GUIDE RAILING

SECTION E608 – SIDEWALKS, DRIVEWAYS, BICYCLE PATHS AND VEGETATION CONTROL STRIPS

E608-1 DESCRIPTION:

All specifications as shown in Section 608 New York State Standard Specifications dated May 1, 2008 and all addenda shall apply, except excavation and foundation course shall be completed by others. Erie County Standard sheet -EC 93-2 (available at the Erie County DPW Div. Highways 95 Franklin Street, Buffalo, NY 14202) shall be referenced for this work.

Concrete Sidewalks and Driveways. Payment shall be made for the total cubic yards delivered to the indicated Maintenance District. Price bid shall include all labor, materials, equipment and transportation costs required to deliver the materials to the indicated Maintenance District.

Hot Mix Asphalt (HMA) Sidewalks, Driveways, Bicycle Paths and Vegetation Control Strips. Payment shall be made for the total tons delivered to the location directed. Price bid shall include all labor, materials, equipment and transportation costs required to deliver the materials only. No placement is required.

Payment shall be made under:

Item No.	Item	Pay Unit
E608.010101	Concrete Sidewalks and Driveways - Clarence District	CY
E608.010102	Concrete Sidewalks and Driveways - Harlem District	CY
E608.010103	Concrete Sidewalks and Driveways - Hamburg District	CY
E608.010104	Concrete Sidewalks and Driveways - East Aurora District	CY
E608.010105	Concrete Sidewalks and Driveways - East Concord District	CY
E608.020102	Hot Mix Asphalt (HMA) Sidewalks, Driveways, Bicycle Paths, and Vegetation Control Strips	TON

SECTION E609 – CURB AND CURB & GUTTER

Section E609 of the NYSDOT Standard Specifications dated May 1, 2008 and all addenda shall apply except as modified herein.

Concrete Curb Type BB: Section 609-1 through 609-5 of the New York State Standard Specifications dated May 1, 2008 and all addenda shall apply. Three hundred (300) linear feet minimum per job site. Refer to the detail for Item E609.03 Concrete Curb Type BB.

Concrete Curb and Gutter Type BB: Section 609-1 through 609-5 of the New York State Standard Specifications dated May 1, 2008 and all addenda shall apply. Two hundred (200) linear feet minimum per job site. Refer to the detail for Item E609.05 Concrete Curb and Gutter Type BB.

Concrete Curb Repair: As modified by detail for Item E609.25 Concrete Curb Repair

Payment shall be made under:

Item No.	Item	Pay Unit
E609.03	Concrete Curb Type BB	LF
E609.05	Concrete Curb and Gutter Type BB	LF
E609.25	Concrete Curb Repair	LF

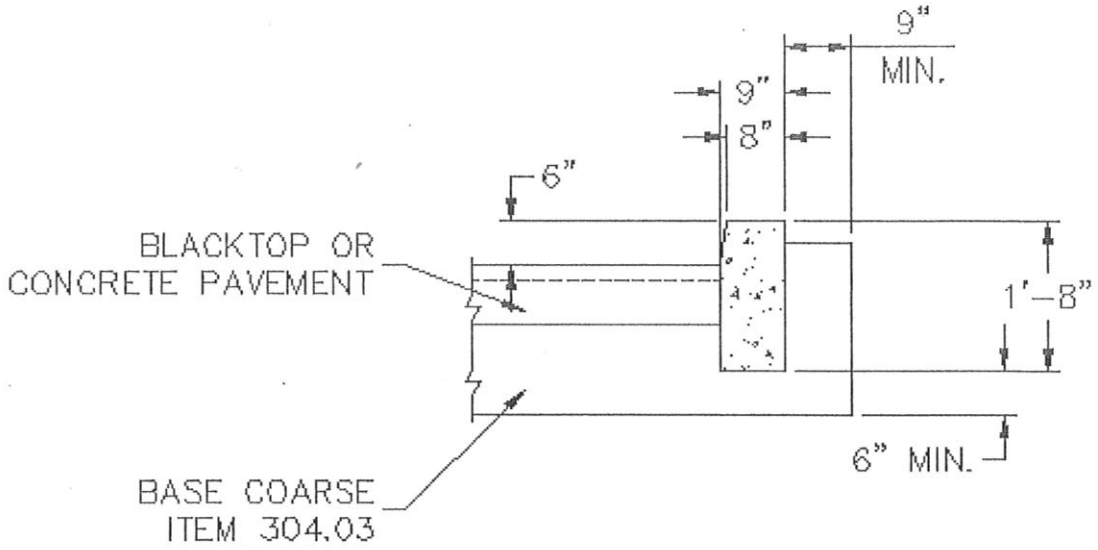

CONCRETE CURB
TYPE "BB"
NOT TO SCALE

ITEM E609.03 CONCRETE CURB TYPE BB

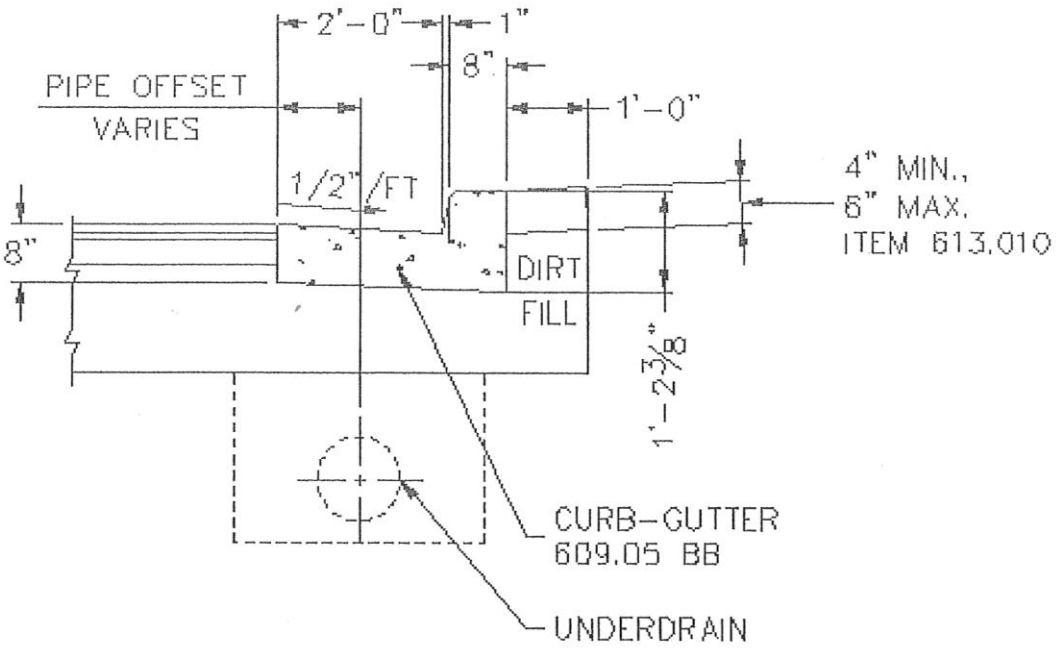

ITEM E609.05 CONCRETE CURB AND GUTTER TYPE BB

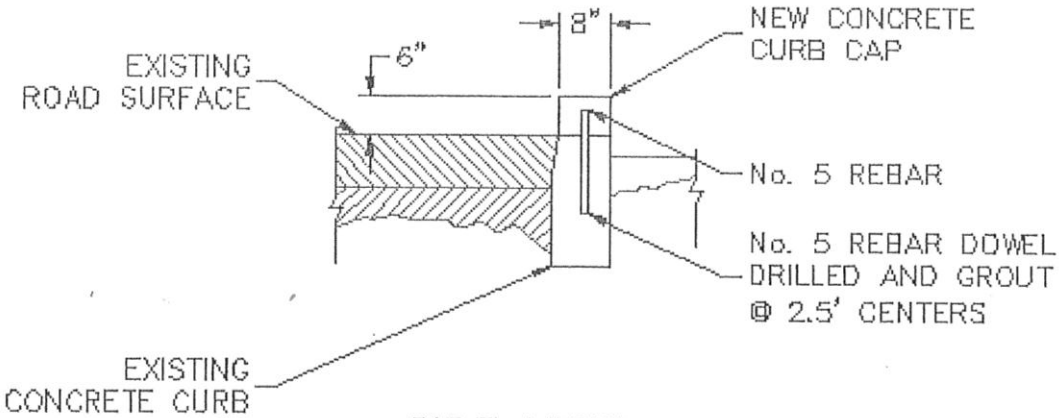

SIDE VIEW
NOT TO SCALE

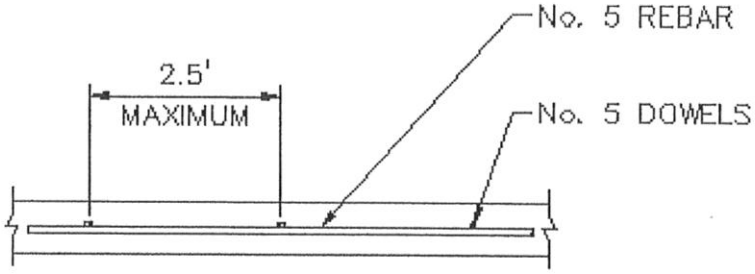

TOP VIEW
NOT TO SCALE

THE UNIT PRICE BID PER LINEAR FOOT SHALL INCLUDE THE COST OF ALL LABOR, MATERIALS AND EQUIPMENT NECESSARY TO PERFORM THE WORK TO THE SATISFACTION OF THE ENGINEER, EXCEPT EXISTING CONCRETE CURB CAP TO BE REMOVED BY OTHERS.

ITEM E609.25 - CONCRETE CURB REPAIR

SECTION E610 – GROUND VEGETATION – PREPARATION, ESTABLISHMENT AND MANAGEMENT

610-1 DESCRIPTION. Section 610 of the New York State Standard Specifications dated May 1, 2008 and all addenda shall apply except as modified herein.

Mowing. The Contractor shall provide all labor, equipment and material necessary to mow that area adjacent to the edge of pavement; the limit of this work area to be established by the Engineer.

610-2 MATERIALS. Section 610 of the New York State Standard Specifications dated May 1, 2008 and all addenda shall apply except as modified herein.

610-3 CONSTRUCTION.

Mowing. Roadside vegetation to be cut to a height not greater than 5 inches. Mowing may require work over guiderail, along ditch slopes, road shoulder and other areas depending on topography.

Equipment shall consist of but not be limited to tractor mounted "Brush-Hog" with rear or side extended booms and/or tractor side mounted "Sickle-Bar" type mowers.

Operations shall continue and be repeated, if necessary, until results are acceptable to the Engineer.

All equipment and methods to be used shall be approved by the Engineer prior to the start of work.

The Contractor is required to provide the Engineer with a schedule of locations to be mowed.

All equipment on all tractor/mowers shall be in full compliance with the latest edition of the New York State Vehicle and Traffic Law and shall be equipped with all necessary warning lights, a combination of rotary lights and strobes mounted front and rear of the machine. All warning lights shall be visible from both the front and rear of each machine.

The Contractor must provide adequate support equipment which shall include a two-way radio or mobile phone equipped supervisory and service vehicle. Tractor/mower cabs shall also be equipped with two-way radios or mobile phones.

610-4 METHOD OF MEASUREMENT

610-4.01 Topsoil. Topsoil shall be measured in cubic yards. Delivery will be by truck load from the plant or pit to the job site.

610-4.02 Turf Establishment. The quantity to be measured for payment will be in square yards on slope to the nearest whole square yard of turf established.

610-4.03 Wildflower Seeding. The quantity to be measured for payment will be in square yards on slope to the nearest whole square yard of wildflower seeding.

610-4.04 Mowing. The quantity to be measured shall be the number of miles of roadway mowed including adjacent areas that are mowed. Measurement shall be made along edge of pavement.

610-5 BASIS OF PAYMENT

610-5.01 Topsoil. The unit price bid shall include the cost of all labor, materials and equipment necessary to load the topsoil into trucks (either Erie County trucks or others).

The unit price bid for delivery of topsoil shall include the cost of supplying all equipment, labor and material necessary to end dump topsoil at a location designated by Erie County.

610-5.02 Turf Establishment. The unit price bid shall include the cost of all labor, materials and equipment including initial water, mulch and mulch anchorage as necessary to satisfactorily complete the work.

610-5.03 Wildflower Seeding. The unit price bid shall include the cost of all labor, materials and equipment including initial water, mulch and mulch anchorage necessary to satisfactorily complete the work.

610-5.04 Mowing. The unit price bid shall include the cost of all labor, materials and equipment necessary to complete the work.

Payment will be made under:

Item No.	Item	Pay Unit
E610.1402	Topsoil – Roadside	CY
E610.140201	Delivery of Topsoil - Roadside (0 to 10 miles)	LS
E610.140202	Delivery of Topsoil - Roadside (11 to 20 miles)	LS
E610.140203	Delivery of Topsoil - Roadside (21 to 30 miles)	LS
E610.140204	Delivery of Topsoil - Roadside (Over 30 miles)	LS
E610.1403	Topsoil - Lawns	CY
E610.140301	Delivery of Topsoil - Lawns (0 to 10 miles)	LS
E610.140302	Delivery of Topsoil - Lawns (11 to 20 miles)	LS
E610.140303	Delivery of Topsoil - Lawns (21 to 30 miles)	LS
E610.140304	Delivery of Topsoil - Lawns (Over 30 miles)	LS
610.1601	Turf Establishment - Roadside	SY
610.1602	Turf Establishment - Lawns	SY
610.17	Wildflower Seeding	SY
E610.21	Mowing	Mile

SECTION E614 – PRUNING, IMPROVING AND REMOVING EXISTING VEGETATION

E614-1 DESCRIPTION. Section 614 of the New York State Standard Specifications dated May 1, 2008 and all addenda shall apply for items shown below.

Tree Topping: The work shall consist of topping and limbing as directed by the Engineer. All trees to be topped and limbed will be designated by the Engineer. The tree shall be cut to a height of two feet below all power, telephone and cable T.V. lines.

The Contractor will make available an aerial bucket, two (2) qualified tree climbers and related equipment necessary to satisfactorily complete the work.

The County shall provide all traffic control.

All wood, brush, and other debris resulting from the work shall be disposed of by County of Erie, Division of Highway Personnel.

Liability: The contractor shall protect and shall be liable for injuries to all plants, curbs, pavements, structures, utility lines and other features on the Highway right of way and adjacent property. Replacement and restoration shall be as approved by the Engineer.

E614-4 - METHOD OF MEASUREMENT

Tree Topping: Tree topping shall be measured by the number of hours spent to satisfactorily complete the work.

E614-5 -BASIS OF PAYMENT

Tree Topping: Payment for work will be based on the unit price bid, which payment shall constitute full compensation for all labor, materials, equipment and incidentals necessary to complete the work as specified.

Payment will be made under:

Item No.	Item	Pay Unit
E614.0201	Tree Topping	Hour
E614.0202	Tree Trimming and Brush Chipping	Hour
614.060102	Tree Removal over 4" to 6" Diam. Breast Height, Stumps Cut Flush	EA
614.060202	Tree Removal over 6" to 12" Diam. Breast Height, Stumps Cut Flush	EA
614.060302	Tree Removal over 12" to 18" Diam. Breast Height, Stumps Cut Flush	EA
614.060402	Tree Removal over 18" to 24" Diam. Breast Height, Stumps Cut Flush	EA
614.060502	Tree Removal over 24" to 36" Diam. Breast Height, Stumps Cut Flush	EA
614.060602	Tree Removal over 36" to 48" Diam. Breast Height, Stumps Cut Flush	EA

Item No.	Item	Pay Unit
614.060702	Tree Removal over 48" to 60" Diam. Breast Height, Stumps Cut Flush	EA
614.060802	Tree Removal over 60" to 72" Diam. Breast Height, Stumps Cut Flush	EA
614.060104	Tree Removal over 4" to 6" Diam. Breast Height, Stumps Grubbed	EA
614.060204	Tree Removal over 6" to 12" Diam. Breast Height, Stumps Grubbed	EA
614.060304	Tree Removal over 12" to 18" Diam. Breast Height, Stumps Grubbed	EA
614.060404	Tree Removal over 18" to 24" Diam. Breast Height, Stumps Grubbed	EA
614.060504	Tree Removal over 24" to 36" Diam. Breast Height, Stumps Grubbed	EA
614.060604	Tree Removal over 36" to 48" Diam. Breast Height, Stumps Grubbed	EA
614.060704	Tree Removal over 48" to 60" Diam. Breast Height, Stumps Grubbed	EA
614.060804	Tree Removal over 60" to 72" Diam. Breast Height, Stumps Grubbed	EA
614.0701	Pre-Existing Stump Removal up to 24" diameter at 6 inches above grade	EA
614.0702	Pre-Existing Stump Removal over 24" to 48" diameter at 6 inches above grade	EA
614.0703	Pre-Existing Stump Removal over 48" diameter at 6 inches above grade	EA

SECTION E618 – BITUMINOUS MATERIAL

E618-1 DESCRIPTION.

The bid price per gallon for items delivered and applied shall include the cost of delivering and applying the liquid bituminous material at any location within Erie County.

The bid price per gallon for F.O.B. items shall include the cost of heating (as appropriate) and loading aboard County owned or rented containers at the supplier storage facility.

Payment for all heated materials will be for the number of gallons furnished (and applied, if applicable) measured at a temperature of 60°F.

Fiber Reinforced Bituminous Membrane Surface Treatment. The work shall consist in the construction of a fiber reinforced bituminous membrane surface treatment known as "FiberMat - Type A" as a Stress Absorbing Membrane, SAM and as "FiberMat-Type B" when used as a Stress Absorbing Membrane Interlayer, SAMI. This is accomplished by using a specific applicator, which can be mounted on an asphalt distributor modified for applying the surface treatment of bituminous binder reinforced with glass fibers. The applicator comprises an open bottomed spray bar housing fan or blower for producing a down draft in the housing, and at least one spray bar mounted on the housing and adapted to extend transversely in the direction of movement of the asphalt distributor on which the unit can be mounted.

A number of nozzles spaced longitudinally along the spray bar for spraying bituminous material, means of controlling the nozzles, and a number of sources for dispensing the cut glass fibers through the open bottomed housing to the surface of the bituminous material previously sprayed shall also be included.

Asphalt emulsion, aggregate and in-place chopped fibers are combined to form a versatile treatment, ideal for sealing as a SAM and arresting severely alligator cracked surfaces. The in-place chopped fiber gives the surface an improved tensile strength and resilience.

When applied within the pavement structure the fiber reinforced bituminous membrane surface treatment acts as a SAMI for the treatment of reflective cracking prior to the construction or placement of subsequent layers.

Synthetic Pavement ("SP-III"). SP-III is a high performance "synthetic pavement." The product is used as deep penetrating stabilizer and sealer. SP-III provides protection from dust, mud, and erosion along most secondary road systems.

Liquid Membrane Polymer ("LMP"). This specification applies to asphaltic polymer compounds used to rejuvenate, strengthen, and waterproof asphaltic materials used to repair asphalt and concrete roadway surfaces.

Asphalt Emulsion Slurry Seal The slurry seal shall consist of a mixture of emulsion, mineral aggregate, and water properly proportioned mixed and spread evenly on the surface as specified. The slurry shall have a homogeneous appearance, adhere firmly to the surface and have a skid resistant texture.

Spray Patch Tank Rental. Portable Spray Patch Tanks shall be equipped with a gasoline driven pressure pump with by-pass and suck-back capabilities. Tanks will be a minimum 500 gallon capacity, capable of being top or bottom loaded, insulated, and skid mounted. Prices bid shall include unit loading on County owned vehicle at supplier's plant. The necessary labor and fuel to be supplied by the County. Unit bid price shall be per gallon ***ADDED TO*** F.O.B. prices.

Self Propelled Stone Spreader. Additional charge per gallon to any delivered and applied 618 Item. Furnish self propelled stone spreader to uniformly apply aggregates for the above

operations. Spreader to be supplied to job site with operator, fuel and maintenance. Unit bid price shall be per gallon ***ADDED TO*** F.O.B. prices.

Mixing Liquid Bituminous Material in Portable Pugmill and Placing with Paver. Additional charge per gallon to any delivered and applied item listed below shall include a pugmill with operator and an approved paver with operator at any location within Erie County. Mixing equipment shall conform to New York State specification 302-3.02. Unit bid price shall be per gallon ***ADDED TO*** F.O.B. prices.

Mixing Bituminous Material in a Traveling Plant Mixer. Additional Charge per gallon to any delivered and applied item listed below shall include a self propelled traveling plant with operator at any location in Erie County. Unit bid price shall be per gallon ***ADDED TO*** F.O.B. prices.

Mixing Bituminous Material in a Traveling Plant Mixer with a Shoulder Attachment. Additional charge per gallon to any delivered and applied item listed below. Price shall include a self propelled traveling plant mixer with a shoulder widening attachment with operator to any location in Erie County. Unit bid price shall be per gallon ***ADDED TO*** F.O.B. prices.

E618-2 MATERIALS

Anionic (High Float) Rapid Set Emulsion Grade: HFRS -2P. The emulsion is a High Float, Rapid Setting, Polymer Modified emulsion. It shall be homogeneous and shall conform to the following requirements.

Properties	Minimum	Maximum
Viscosity Say bolt Furol @ 122F (50C), sec.	100	400
Storage Stability 24 hour, %	---	1.0
Demulsibilty, 0.22 N CaC1, %	60	---
Sieve Test, %	---	0.10
Polymer, Wt. %	2	---
Distillation		
Oil Distillate, by volume of emulsion, %	---	3
Residue form distillation, %	63	---
Tests on Residue from distillation		
Penetration, 77°F (25°C) 100g, 5 sec.	100	200
Ductility, 39.2°F(4°C), 5 cm/Minute, cm.	50	---
Float Test @ 140°F (60°C), sec.	1200	---
Solubility in Trichlorethylene, %	97.5	---
Viscosity @ 140°F, @ sec-1 Poise (C)	1500	---

(a) All tests shall be run in accordance with ASTM D-244 except as noted.
(b) ASTM D-244 except that the maximum temperature that the material shall be subjected to is 383° F 10°F.
(c) ASTM Method P-160 published 1984.

(d) The demulsibility test shall be performed within 30 days from the date of shipment.

The emulsion shall remain homogeneous and usable for a minimum of 30 days. The supplier will not be held responsible for emulsion test of samples that have frozen before testing. The polymer shall be added at the time of manufacture of the emulsion.

Cationic Rapid Set Emulsion Grade: CRS -2P

Test on Emulsion	Minimum	Maximum
Viscosity Say bolt Furol @ 122F (50C), sec.	100	400
Storage Stability Test, One (1) Day (Difference in percent residue)	---	---
Classification Test		
Particle Charge Test		
Sieve Test, 20 Mesh, Percent		0.3
Polymer, Wt. %	2	---
Distillation		
Residue form distillation	65	---
Oil Distillate, Volume Total Emulsion, %	---	3
Tests on Residue from distillation: 1		
Penetration, 77°F (25°C) 100g, 5 sec.	100	200
Ductility, 39.2°F (25°C), 5 cm/Minute, cm. (ASTM D113)	50	---
Softening point, Ring & Ball, degree F (ASTM D36)	100	---
Elastic Recovery, % (3)	50	---

(1) Modifies shall not be post-added to the finished emulsion. All modifies shall be incorporated during the milling process at the manufacturer's facility.

(2) Maximum distillation temperature for distillation test is 350 degrees F. This is an exception to ASTM 0244.

(3) Elastic Recovery: The ductilometer and samples are to be conditioned at 50 degrees F prior to the test. Prepare the brass plate, mold and briquette specimen in accordance with ASTM 0113. The molds shall be of the non-tapered type use for Force Ductility Testing. Maintain the specimen at the specified temperature of 50 degrees F for 85--90 minutes. Immediately after conditioning, place the specimen in the ductilomenter and proceed to elongating the sample to 20 centimeters at a rate of pull of 5 cm/min. After the 20 second elongation has been reached, stop the ductilometer and hold the sample in its elongated position for 5 minutes. After 5 minutes, clip the sample approximately in half and allow the sample to remain undisturbed in the ductilometer for one (1) hour. After 1 hour retract the half sample specimen until the two broken ends touch. Note the elongation (E) in centimeters and calculate the percent elongation as follows:

$$\% \text{ Recovery} = \frac{20 - E \times 100}{20}$$

Liquid Membrane Polymer ("LMP") Single component, water reducible, asphaltic polymer bonding and sealing compound for asphalt or concrete roadway surfaces.

SECTION E618 – BITUMINOUS MATERIAL

Synthetic Pavement ("SP-III"). SP-III is a water-reducible polymer complex.

Fiber Reinforced Bituminous Membrane Surface Treatment.

A. Bituminous Materials. Bituminous Material Approval. The bituminous material shall be obtained from a storage facility that has been approved by the Director, Materials Bureau within the current calendar, before the start of work.

Bituminous Material Selection. The selected bituminous material shall be compatible with the aggregate to be used. It is the contractor's responsibility to ensure compatibility between the bituminous material and the aggregate. The selection of bituminous material shall be subject to the approval of the NYSDOT, Materials Bureau Engineer, and conform to the standards below with the following exceptions.

Surface Treatment Material Designation		Grade Description
702-4701	CRS-1 P	Polymer modified cationic asphalt emulsion
or where appropriate		
	CRS2P	Polymer modified cationic asphalt emulsion

Elastic recovery, 10oC - minimum 60%.

B. Aggregates. The aggregates for the fiber reinforced bituminous membrane surface treatment shall conform to the requirements of NYSDOT Item Section 703-02, "Coarse Aggregate" and be from an approved source. Where aggregates for pavement surface treatment are from more than one source or of more than on type of material, they shall be proportioned and blended to provide a uniform mixture. The regional Director or the authorized representative shall approve the procedure used for this proportioning.

Where the fiber reinforced bituminous membrane surface treatment is to be considered as a SAM then the aggregate size shall be Size 1, 1 ST or Size 1A or a combination of both as in a double dressing.

Where the fiber reinforced bituminous membrane surface treatment is to be considered as a SAMI, then the aggregate size shall be Size1 A only.

In both cases the aggregate shall meet one of the following:

1. Limestone having an acid insoluble content of not less than 20%, excluding particles of chert and similar siliceous rocks. Blends of siliceous and non-siliceous and non-siliceous limestone will not be permitted.
2. Dolomite.
3. Sandstone, granite, chert, trap rock, ore tailings, or other non-carbonate materials.
4. Gravel, or a natural or manufactured blend of two or more of the following types of material; limestone, dolomite, gravel, sandstone, granite, chert, tarp rock, ore tailings, slag or other similar materials meeting the following requirements
    - Non-carbonate plus 3.2mm particles must comprise a minimum 10% of the total aggregate (by weight with adjustments to equivalent volumes for materials of different specific gravities).
    - For Size 1A a minimum of 20% of plus 4.7Smm particles must be non-carbonate.
    - For Size 1 ST a minimum of 20% of plus 9.Smm particles must be non-carbonate.

C. Polymer modifier. The ideal amount of solid or dry polymer modifier shall be 3%, based on the asphalt weight. The polymer materials shall be milled or blended into the asphalt or blended with the "soap phase" or post added to the emulsion but at all times ensuring good homogenization of the polymer within the asphalt emulsion.

D. Fiber. The glass fiber is E Class from an approved source determined by the license holder. The glass fiber spools are supplied internally wound, in coils or cheeses. Typically the spools are cut in-place into nominally 60mm,(2.38") lengths which are distributed uniformly across and between the two parallel applications of modified asphalt emulsion. Glass fiber spread rates are up to 120g/sqm, (40z), with additional asphalt emulsion rates *of* spread, depending on the site requirements.

Asphalt Emulsion. The emulsified asphalt shall conform to AASHTO specifications for dense mixing grade CSS-1 h except that they be of the Quick Set Slurry Seal Emulsion Type and in conformance with ISSA.

The mineral aggregate shall consist of one hundred (100%) percent stone screenings, crushed gravel or slag. The aggregate shall be cleaned and free from vegetable matter and other deleterious substances. When tested according to ASTM 0-2419, the aggregate shall have a sand equivalent of not less than 45. When tested according to AASHTO -T-104 the aggregate shall show a Los Angeles Rattler loss of not more than thirty-five (35%) percent. When tested in accordance with ASTM 0-2419, aggregate shall be non-plastic.

Mineral fillers or liquid retarding and accelerating agent will be considered as part of the aggregate blend and shall be used in minimum required amount. Mineral filler shall only be used if needed to improve the workability of the mix or gradation of the aggregate and shall be graded sufficiently fine to effect complete dispersion through the mixture. The aggregate proposed for use in the work shall have a proven durability record for the conditions and traffic expected.

The combined mineral aggregate shall conform to the following dry gradation when tested by ASTM C136:

Type II (Slurry Seal) Percent

Sieve Size	Passing (Dry)
3/8	100
No. 4	90-100
No. 8	65-90
No. 16	45-70
No. 30	30-50
No. 50	18-30
No. 100	10-21
No. 200	5-15

Theoretical Residual Asphalt Content, percent (%) extracted from dry sample: 9·12

All water used with the slurry mixture will be potable and free from harmful soluble salts.

When stockpiling aggregate, care shall be taken so the aggregate stockpile will not become contaminated with oversize materials or other contamination. Segregation of the aggregate will not be permitted.

The contractor shall provide suitable storage facilities for the asphalt emulsion. The container shall be equipped to prevent water from entering the emulsion. Suitable heat shall be provided if necessary to prevent freezing.

Samples of materials and of the finished slurry surface shall be furnished by the

Contractor as directed by the Contracting Officer, Contractor as additional materials arrive.

Design, Certifications and Demonstrations:

A) Prior to Construction: Sources of all materials shall be selected prior to the time the materials are required for use in the work. All materials shall be pre-tested in a qualified laboratory, as to their suitability for use in slurry. A job mix formula for the slurry mixture shall be prepared prior to construction. More specifically: The contractor shall furnish the Commissioner of Public Works prior to the start of work, a certified statement from the emulsion manufacturer giving analysis of the' base asphalt used in the manufacture of the emulsion. The statement shall also certify that the material represented is true Quick Set emulsion, passing all above procedures. The contractor shall furnish the Commissioner of Public Works prior to the start of work, a certified testing' date sheet from a qualified laboratory. The data sheet will show that the test methods and results on the emulsion and the aggregate, conform to the requirements of these specifications.

B) Prior to the Start of Work: The contractor shall furnish the Commissioner of Public Works prior to the start of work, a job mix formula for the slurry mixture. Acceptance of the formula by the Commissioner is solely for the purpose of quality control, and in no way releases the contractor from his responsibilities. The job mix formula shall provide as a minimum:

1) Sieve analysis of aggregate
2) Percent of mineral filler
3) Percent of water
4) Percent of asphalt emulsion
5) Unit weight of dry aggregate Ibs.lcu. ft. loose and compacted
6) Sample mixes should be evaluated by acceptable testing procedures as to their setting time, mixing characteristics, resistance to rain and abrasion should also be included in this report.
7) Observed effects of moisture content on the specific weights of the test aggregate
8) Application rate of dry aggregate in Ibs./sq. yd. Acceptance of the mix formula by the Commissioner must be done prior to construction start-up. If not, the contractor takes full responsibility for all costs incurred if application of slurry is done prior to this acceptance.

C) The Contractor: Shall submit, along with the required written materials analysis and proposed job mix formula the following physical specimens:

1) 5kg. Of the proposed aggregate selected
2) 4 liters of the proposed emulsion selected
3) 1/2 keg. Of the filler selected, if applicable
4) 3 series of consistency tests as 100, 85, and 70% BR (Bitumen Requirement and at 2-3, 4-5, and 5-7 cm. Consistencies
5) 2 each of Abraded Wet Track Abrasion Test specimens of 100, 85, and 70% BR (bitumen Requirements)

Each specimen shall be indelibly identified with the date and source. The Commissioner of Public Works shall waive the design submittals provided the bidder has previously applied a satisfactorily designed and applied slurry with the same materials proposed for this work. The bidder shall submit a list of completed projects and sources used to the Commissioner of Public Works if the design requirement is waived. In any case untried materials may not be introduced into this work without complete analysis and design of a job mix formula for each new material approved by the Commissioner of Public Works.

E618-3 CONSTRUCTION DETAILS

Liquid Membrane Polymer ("LMP"). Apply in accordance with manufacturer's instructions.

Synthetic Pavement ("SP-III"). Areas of application of SP-III include secondary roadways, gravel and clay-based parking lots, park and golf paths. Application should be in accordance with the manufacturer's instruction.

Asphalt Emulsion, During Construction:

A) Contractor: The contractor is to provide extraction tests performed by a qualified laboratory as required by the Commissioner of Public Works. At least one (1) test per day or every 2,500 square yards of work shall be performed and results documented. If asphalt content or other parameter is found to be out of specifications and not in conformance with the job mix, immediate corrections shall be taken on the remainder of the work and all work already in place shall be evaluated for possible reapplication of slurry, at no additional cost to the Public Works Department. The Commissioner of Public Works will also have the authority to make equitable adjustment in contract price for deficient work based upon test results. Test results are to be submitted to the Commissioner of Public Works within one week of sampling.

B) Samples: The contractor as directed by the Commissioner of Public Works shall furnish Samples of materials and of the finished slurry surface during progress of the work. The Commissioner may request test reports from the contractor as additional materials arrive.

C. Guarantee:

1) The Bidder: Shall guarantee that all material and equipment used to fulfill this contract meets the enclosed specifications.

2) Guarantee: A two (2) year guarantee for defective or inferior bituminous material and/or workmanship shall apply to all bituminous materials supplied and applied under this contract.

D. Equipment, (Tools and Machines). The equipment, tools and machines needed in the performance of the work shall be provided by the contractor, shall be subject to approval by the Commissioner of Public Works and shall be maintained in a satisfactory working condition at all times. The contractor at the time of bidding shall own the equipment with which he intends to complete the contract, if so awarded.

1) Mixing and Application Machines: The slurry mixing and application Machine shall be a self-propelled continuous flow unit capable of interlocking and accurately delivering a predetermined proportion of aggregate, water, and asphalt emulsion to the mixing chamber and of discharging the thoroughly mixed product on a continuous basis. No violent mixing shall be permitted. Each material function of the machine (fines, aggregate, emulsion, and water) shall be accurately metered. The machine shall be automated with time delays so that all functions can be controlled by one switch.

2) Fines Feeder: The slurry seal machine shall be equipped with a fines feeder that provides an accurate metering device or method to introduce a predetermined proportioned of mineral filler into the mixer at the same time and location as the aggregate. The fines feeder shall be used whenever mineral filler is a part of the aggregate blend.

3) Fogging: The slurry seal machine shall be equipped with a water pressure system and fog-type spray bar adequate for complete fogging of the pavement surface with a maximum application of .05 gal. Per square yard. The spray bar shall be so mounted on the mixing machine that fogging will immediately precede application of the slurry seal mixture.

4) Storage Capacity on Machine: Slurry mixing equipment shall have a minimum five (5) cubic yard hopper, four (400) hundred pound cement hopper, with a six (600) hundred gallon emulsion tank and a six (600) hundred gallon water tank.

Slurry Spreading Equipment: A variable-width mechanical type squeegee spreader box shall be attached to the slurry seal, mixing machine. The spreader box shall be equipped and maintained with flexible material in contact with the pavement surface to prevent loss of slurry from the spreader box on varying grades and crown.

The spreader box shall be equipped for lateral distribution of the slurry mixture within the spreader box regardless of the spreader box width or crown or bank of pavement surface. The spreader box shall be kept clean, and build-up of asphalt and aggregate on either squeegee or spreader box shall not be permitted. Burlap drags or other drags shall be provided and shall be cleaned or replaced as needed to. prevent accumulation or crusts of slurry seal mix on the drag.

E. Ownership Requirements: The contractor must own and have available a minimum of three (3) continuous flow five (5) cubic yard slurry machines, so that the delay or inconvenience to the public will be held to a minimum.

F. Auxiliary Equipment: Hand squeegees, the contractor as necessary to perform the work shall provide shovels, and other hand equipment.

G. Composition and Application of Slurry Mixture

1. Composition-Application: The amount of asphalt emulsion to be blended with the aggregate will be determined by the laboratory report provided by the contractor, subject to final adjustment in the field to allow for absorption by the existing surface. The amount of water added must be controlled accurately to insure production of spread able yet completely stable slurry. The slurry shall be a homogeneous mixture sufficiently stable during the entire mixing process and spreading period such that the emulsion does not break; that there is no segregation of the fines from the coarser aggregate and the liquid portion of the mix does not float to the surface.

Total time of mixing, from introduction of emulsion to spreading, shall be two minutes or less. The rate of application per unit shall be minimum, twelve (121bsl sq.yd.) pounds per square yard, maximum fifteen (15Ibs/sq. yd.) pounds per square yard. Mixtures shall be adjusted as required on grades of eight (8%) percent or more.

2. Application: Sufficient quantities of the slurry seal mixture shall be fed into the spreader box such that a uniform and complete coverage of the pavement is obtained. The slurry seal machine shall be operated at such speed that the amount of slurry in the spreader box will remain essentially constant. The slurry mixture shall be the desired consistency as it leaves the mixer and no additional elements shall be added.

A sufficient amount of slurry shall be carried in all parts of the spreader at all times so that complete coverage is obtained. No lumping, balling, or unmixed aggregate shall be permitted. If the coarse aggregate settles to the bottom of the mix, the slurry will be removed from the pavement, and shall be replaced with a proper mix at no additional cost to the Public Works Department. No excessive breaking of the emulsion will be allowed in the spreader box. No build-up of cured slurry mix will be allowed to collect in the spreader box. No streaks caused by oversized aggregate particles or build-up slurry mix on squeegees shall be left in the finished surface.

3. Joints: The longitudinal joint between adjacent lanes shall have no visible lap, pinholes, or uncovered areas. Thick spots caused by overlapping will be smoothed immediately with hand squeegees before the emulsion breaks, so that a uniform surface is obtained.

4. Handwork: Approved squeegees shall be used to spread slurry in non-accessible areas to the slurry mixer. Care should be exercised in leaving no unsightly appearance from

handwork. Handwork will also be required on radii, along curb and gutter lines and around fixtures.

5. Curing: Completed slurry seal shall be protected from traffic by barricades and markers for the period of time necessary for complete cure of material and longer when weather condition and thickness of slurry seal requires additional time for proper drying.

6. Protection of Fixtures: Special care shall be taken around road fixtures such as catch basins, manholes, water-boxes, gas valves, etc., so as not to cover, or impair from operation. All structures which may become marred by slurry will be marked prior to slurry application and cleaned immediately after application by sweeping, shoveling, wiping, etc., and all disturbance to the uncured surface caused by this activity will be touched up by hand.

Utmost care shall be taken by the contractor to keep asphalt materials off equipment, buildings, and etc., Buildings, etc., shall be covered when spraying adjacent to them. If noticeable amounts of the material are deposited on building walls, etc., it shall be removed by the contractor.

7. Weather Limitations: No slurry shall be applied when there is any danger that the finished product will freeze before it cures completely; when the pavement or air temperature is 55° F or *below* and *falling,* but may be applied when both air and pavement temperatures are 50° F or above and rising; and in the period following a rain while puddles of water remain on the surface to be coated. Slurries that cure by evaporation should not be laid during periods of abnormally high humidity, or when rain may fall within a few hours. However, if the contractor elects to proceed it will be his responsibility to replace any failed slurry.

a. Time: No slurry will be applied before 7:00 am or after 4:00 pm unless directed by the Commissioner of Public Works. An anticipated schedule of slurry application listing streets to be slurred per day will be submitted to the Commissioner of Public Works prior to commencement of operation. This will be used strictly for general information purposes of the department.

8. Traffic Control: Suitable methods such as barricades, flagmen, pilot cars, etc., shall be used to protect the uncured slurry will be the responsibility of the Contractor. The Contracting office shall give final approval to the method used. If damage occurs where suitable means have been made to protect the uncured slurry, violators will be prosecuted and the Contractor will be reimbursed for the amount of the damages.

9. Cleaning Equipment: Power brooms, power brushes, power blowers, water flushing equipment and hand brooms shall be suitable for cleaning the surface and cracks of the old surface.

10. Water Supply: It shall be the responsibility of the contracting agency to make available a source of clean, potable water in close proximity to the job site. Any charges incurred will be paid by the contracting agency.

11. Measurement: Work prescribed by this item will be measured by the square yard surface area. The yard calculations will be based on dimensions determined from measurements of the actual area slurry sealed as authorized.

Fiber Reinforced Bituminous Membrane Surface Treatment

A. Weather and Seasonal Limitations. The fiber reinforced bituminous membrane surface treatment may be applied on a dry or damp surface, but should not be laid where there is standing water or on a wet surface. Application should only be undertaken when the surface temperature is at least 50°F, and rising, subject to site inspection. Greater initial traffic speed control may be required in certain circumstances, for example when the surface temperature is low.

The fiber reinforced bituminous membrane surface treatment shall be placed normally in New York during the period May 1st to the third Saturday in September. Application outside of

these times is permissible only with the approval of the contractor and local Engineer.

B. Equipment. The following equipment shall be required:

1. Bituminous Material Distributor. The liquid bituminous fiber applicator is used that could be mounted on a vehicle for applying a surface treatment of bituminous binder reinforced with glass fibers. The applicator shall comprise an open bottomed spray bar housing, a fan or blower producing a down draft in the housing, and at least one spray bar mounted on the housing and adapted to extend transversely in the direction of movement of the vehicle on which the applicator is mounted. A number of nozzles spaced longitudinally along the spray bar for spraying binder material, means for controlling the nozzles, and a number of sources for dispensing cut glass fiber through the open bottomed housing to the surface of the binder material previously sprayed shall also be included.

The applicator shall have been calibrated within the previous 12 months for transverse and longitudinal distribution application rates according to ASTM D2995, Practice for Determining Application Rate of Bituminous Applicator or other suitable method. The bituminous fiber applicator shall be equipped, maintained, and operated so that the bituminous materials can be applied at controlled rates from 0.1 l/m2 (0.022gal/SY) to 2.5 l/m2 (0.56gal/SY). The fiber is applied at controlled rates from nominally 30 to 120g/m2 (approx. 1-4oz/SY). These applications shall be such that a uniform first layer of asphalt emulsion is applied followed by uniform layer of glass fibers that is chopped in-place and covered with a uniform second layer of asphalt emulsion.

2. Self-propelled aggregate spreader. Aggregate spreader shall be a self-propelled unit capable of uniformly spreading the aggregate at the required rate on a minimum width of 150mm wider than the width of the lane to be treated. The spreader shall meet the approval of the Engineer and be calibrated similar to the test method used in ASTM D2995, within the previous 12 months, for transverse and longitudinal distribution.

3. Pneumatic tire roller. The Engineer will require a sufficient number of pneumatic tire rollers to permit the initial rolling of the aggregate to occur within 5 minutes of the application of the fiber reinforced bituminous membrane surface treatment. The pneumatic roller shall be self-propelled and have oscillating wheels with smooth tread tires and will have a minimum ballasted weight of 9 metric tons or 10 US tons. The tire pressure for all wheels shall be uniform within 2psi. The rollers shall be operated at a maximum speed of 5 mph. To prevent pick-up of the aggregate on the tires, the tires shall be kept moistened with water mixed with small quantities of detergent or other material approved by the Engineer. In no case shall a solvent having an effect upon the fiber reinforced bituminous membrane surface treatment be used.

4. Static steel-wheel rollers. Shall be self-propelled and be either 9 to 11 metric ton tandem three-axle type or 7 to 9 ton tandem two-axle type. This shall be used particularly when a SAMI application is specified for the fiber reinforced bituminous membrane surface treatment following the pneumatic tire roller. The aim is to crush the aggregate and blend the surface prior to the application of the new overlay.

5. Self-propelled Rotary Power Broom. A self-propelled rotary power broom shall so be designed, equipped, maintained and operated so that the pavement surface can be swept clean. The broom shall have an adjustment to control downward pressure. The power broom shall meet the approval of the Engineer. In the case where a SAMI is being overlaid the same or following day a Vacuum sweeper shall be used only.

C. Determination of the Quantities of Materials to be applied in conjunction with the Engineer the Contractor will decide upon the appropriate rates of asphalt emulsion and fiber for and during the job. Typical rates of application for the asphalt emulsion range from 1.8-2.7L/m2 (0.4-0.6 Gal/SY) and fiber application rates from 30-120g/m2 (approx 1-4oz/SY).

1. For SAM applications the aggregate shall be of 6mm, 10mm or 12.5mm

maximum size and be added at rates as per conventional chip sealing operations – typically (11-13 kg/m2 ---- approx. 19-26 lb/SY).

2. For SAMI applications only the 6mm maximum size aggregate is used at typically (6-8 kg/m2 --- 10-15 lb/SY) to blend in the surface if it is to be overlaid within a few weeks. Otherwise higher aggregate application rates are employed and approved with the local engineer.

D. Preparation of Surface. A self-propelled power broom shall be used to clear any loose material from the surface to be treated immediately prior to the application of the fiber reinforced bituminous membrane surface treatment. Any surface-defects such, as potholes shall be repaired prior to commencement of works. Manhole covers, drop inlets, catch basins, curbs and any structure within the roadway area shall be protected against the fiber reinforced bituminous membrane surface treatment. Any cracks greater than W' shall be pre-treated with approved hot or cold polymer modified bituminous crack filler. Information on suitable crack fillers for use in conjunction with the fiber reinforced bituminous membrane surface treatment can be given by the license holder.

E. Application of the fiber reinforced bituminous membrane surface treatment. Fibers and bituminous materials shall be applied by means of pressure distributor in a uniform, continuous spread over the section to be treated and within the temperature range, sandwiching the in-place chopped fibers between the two layers of asphalt emulsion. The quantities of fibers and bituminous materials shall be decided between the Engineer and Contractor dependant on the job site. The distributor shall be moving forward at the proper application speed at the time the spray bar and fiber chopper bars are opened. If any skipped areas or deficiencies occur, the operation shall be immediately stopped. Junctions of spreads shall be carefully made to assure a smooth riding surface and the deficient areas corrected in a manner approved by the Engineer. Overlaps of the membrane shall be made up to 6".

The fiber reinforced bituminous membrane surface treatment shall not be applied more than 150 ft, in advance of the self-propelled chip spreader. Under no circumstances shall operations proceed in such a manner that the fiber reinforced bituminous membrane surface treatment will be allowed to chill, set-up, dry or otherwise impair retention of the cover aggregate. Traffic will not be allowed to run on, the unprotected fiber reinforced bituminous membrane surface treatment. The distributor, when not spreading, shall be parked so that the spray bar or mechanism will not drip on the surface of the traveled way.

F. Application of the Cover Aggregate. Immediately following the application of the fiber reinforced bituminous membrane surface treatment, cover aggregate shall be spread at the rate agreed between the Engineer and Contractor. Spreading shall be accomplished in such a manner that the tires of the aggregate spreader at no time contact the uncovered and newly applied fiber reinforced bituminous membrane surface treatment. Immediately after the cover aggregate is spread, any deficient areas shall be covered by additional material. Pneumatic tire rolling shall begin immediately. The initial pass shall be completed within 5 minutes of the application of the fiber reinforced bituminous membrane surface treatment and shall be continued until three complete passes are obtained within 30 minutes of the application of the fiber reinforced bituminous membrane surface treatment. Pneumatic tire rollers shall come to a complete stop prior to a change in direction. For overlaps the first pass of aggregate and the space uncovered shall be up to 6". Upon the return pass the aggregate coverage shall be complete and over by up to 6" to insure full coverage of the membrane.

G. Opening to Traffic. "Loose Stone" signs meeting requirements of MUTCD shall be posted at 1 mile, intervals throughout the length of the project. These signs shall be erected before treatment commences and removed after contract is accepted. Unless otherwise

specified, the highway shall be kept open to traffic at all times. Traffic shall be discontinued on the lane being surface treated; and as soon as the final layer is applied and rolled, controlled traffic may be permitted thereon. "Loose Stone" signs meeting requirements of MUTCD shall be posted at 1 mile, intervals throughout the length of the project. Traffic shall be maintained at a speed not to exceed 15 mph for a period of four hours after placement of the fiber reinforced bituminous membrane surface treatment using two-way radio-equipped patrol vehicles in accordance with the maintenance and protection of traffic details shown on the plans. All patrol vehicles shall be equipped with signs meeting the requirements of the MUTCD. Immediately after completion of the fiber reinforced bituminous membrane surface treatment, the section shall be posted for speed limit of 30 mph, for a period of three days. The signs should be posted at 0.5 mile intervals and signs showing other speed limitations should be covered for this period. All construction signs shall meet the requirements of the MUTCD.

618-4 METHOD OF MEASURMENT

Liquid Membrane Polymer ("LMP"). The amount of material used shall be measured as the number of gallons applied to the roadway.

Fiber Reinforced Bituminous Membrane Surface Treatment. Fiber reinforced bituminous membrane surface treatment will be measured by the number of square meters of compacted material in place making no deductions for minor untreated areas such as catch basins and manholes.

E618-5 BASIS OF PAYMENT

Liquid Membrane Polymer ("LMP"). The unit price bid per gallon for the material shall include the cost of furnishing materials and all labor and equipment necessary to complete the work.

Synthetic Pavement ("SP-III"). The unit price bid per gallon shall include the cost of furnishing materials and all labor and equipment necessary to complete the work.

Fiber Reinforced Bituminous Membrane Surface Treatment. The unit price bid per square yard per day, plus the addition of any items the Agency requires the Contractor to furnish. The following items will be performed by the Agency, unless otherwise directed:

- Manhole covers, water valves, catch basins, and other drainage structures shall be clearly referenced for location and adjustment.
- Thermoplastic traffic markings shall be removed.
- All vegetation at the edge of the pavement shall be removed.
- Compaction with operator.
- Furnish aggregate delivered to the Chip-Spreader.
- Furnish Chip-Spreader.
- Maintenance and Protection of Traffic.
- Furnish self propelled Power Broom or Vacuum.

Asphalt Emulsion: The work performed as described in Measurement will be paid for at the unit price bid per square yard for "Slurry Sealed Pavement Surface". Measurement and payment will be limited to longitudinal length and width of which there is definite texture present. The payment per square yard shall include aggregate, emulsion equipment, and necessary labor to complete the work as specified.

SECTION E618 – BITUMINOUS MATERIAL

For Mixing Liquid Bituminous Material in Portable Pugmill and Placement with a Paver. Additional charge per gallon to any delivered and applied item shall include a pugmill with an operator and an approved paver with operator at any location within Erie County. Mixing equipment shall conform to New York State specification 302-3.02

Price Adjustments. The price escalation clause that applies to CRS-1p / CRS-2p under the liquid portion of this bid shall also apply to Fiber Reinforced Bituminous Membrane Surface Treatment. The price adjustment per gallon shall be multiplied by a factor .4 to calculate the price adjustment per square yard.

Formula:

$$\text{Price Adj. Per SY} = \frac{\text{New Avg. FOB Terminal Price} - \text{Base Avg. Terminal Price}}{235} \times \text{Total Allowable Petroleum \%} \times .4$$

For purposes of this contract, the **October 1, 2013 Base Average** F.O.B. Terminal Price for Asphalt Cement shall be used. The price is **$593.00 per U.S. Ton**.

Price Adjustment for Liquid Bituminous Material. Price adjustments will be based on the New York State Office of General Services Formula as follows:

1. Price adjustments allowed will be based on the October 1, 2013 average of the F.O.B. terminal price per ton of AC-10 or AC-20 asphalt cement (base average F.O.B. terminal price), at the following locations.

Chevron, Perth Amboy, New Jersey	NOCO, Tonawanda, NY
CITGO, Albany, New York	Suit-Kote, Cortland, NY
United Refinery, Tonawanda, NY	Gorman Brothers, Rensellear, NY
CITGO, Bayonne, New Jersey	Bitumar, Montreal, CANADA
Marathon, Tonawanda, New York	

The average F.O.B. terminal price per ton for October 1, 2013 is $593 per English Ton.

NOTE: The same grade of asphalt cement used in establishing the base average F.O.B. terminal price shall be used in establishing the new average F.O.B. terminal price.

Any introduction or withdrawal of a temporary voluntary allowance, terminal operator's allowance, or other discount offered to the trade in general from the posted price of asphalt cement at any of the above terminals will be considered, for purposes of price adjustment, as a change in the F.O.B. terminal price.

In the event that one or more of the above named sources discontinue posting a price for asphalt cement, the base average F.O.B. terminal price shall be recalculated by removing that location from the original base average F.O.B. terminal price. All new average F.O.B. terminal prices calculated from that date shall reflect the reduction in the number of reporting locations.

2. The new average F.O.B. terminal price will be determined based on the above F.O.B. terminal prices posted on the 20th of each month, hereafter known as the "Adjustment Date", during the contract period starting with March 20, 2014. However, price

adjustments, in accordance with the formula below, will be effective for deliveries made on and after the first of the month (I.e., April 1, 2014) following the adjustment date.

3. The unit prices of bituminous materials purchased from any award based on this specification will be subject to adjustment based on the following formula:

   "Price Adjustment (per gallon) Equals (New Average F.O.B. Terminal Price Minus Base Average Terminal Price) Divided by 235 Times Total Allowable Petroleum %.

New Average F.O.B. Terminal Price. The average F.O.B. terminal price for AC-10 or AC-20 asphalt cement at the above mentioned ten (10) locations as determined by the New York State Office of General Services on the 20th of the month.

Base Average F.O.B. Terminal Price. The average F.O.B. terminal price of AC-1 0 or AC-20 asphalt cement as of October 1, 2013.

Total Allowable Petroleum. The percentage of total allowable petroleum for each item is as follows:

Price Adjustments will not be allowed for materials which do not have an asphalt cement base.

EXAMPLE:

$$\frac{\$175.00 \cdot \$145.00}{235} \times 0.66 = +\$0.84 \text{ per Gal/on}$$

Item 702-3101
Base Avg. Price =$145.00
New Avg. Price =$175.00
TOTAL Allowable petroleum = 66%

Positive Price Adjustment number shall be added to original per gallon Bid Price. Negative Price Adjustment number shall be subtracted from original per Gallon Bid Price.

4. Price adjustments allowed by this contract shall be calculated and applied to the original bid prices. There will not be price adjustments unless the change amounts to more than $0.01 per gallon from the original bid price. In these instances a purchasing memorandum will not be issued and prices will revert back to the original prices.

5. If at any time after March 20, 2014 the average posted price of asphalt cement at the aforementioned terminals increases or decreases by $4.00 per ton or more over or under the last average F.O.B. posted price utilized by the State for adjustment purposes, the State shall publish a special price adjustment which shall be effective eight (8) days subsequent to the date on which the change in the average F.O.B. posted price became effective.

6. All price adjustments will be computed by calculator to three decimal places.

7. Regardless of price adjustments allowed, at no time shall prices charged a County contract participant be higher than those offered commercial or governmental accounts for similar or lower quantities.

8. Should these provisions result in a price structure which becomes unworkable, detrimental or injurious to the County or in prices which are not truly reflective of market conditions or which are deemed by the County to be unreasonable or excessive, and no adjustment in

price is mutually agreeable, the County reserves the sole right upon ten (10) days written notice mailed to the contractor to terminate any contract resulting from this bid opening.

Payment will be made under:

Item No.	Item	Pay Unit
E618.0401	Paving Asphalt (AC 15) Delivered & Applied	GAL
E618.0402	Paving Asphalt (AC 15) F.O.B. Plant	GAL
E618.0501	Paving Asphalt (AC 20) Delivered & Applied	GAL
E618.0502	Paving Asphalt (AC 20) F.O.B. Plant in Paper Containers - Delivered & Applied	GAL
E618.0701	Misc. Asphalt Cement (18-60) Joint/Crack Filler Packaged in Paper Containers - Delivered & Applied	GAL
E618.0702	Misc. Asphalt Cement (18-60) Joint/Crack Filler Packaged in Paper Containers - F.O.B. Plant	GAL
E618.2001	Medium Curing Liquid Asphalt (MC-30) – Delivered & Applied	GAL
E618.2002	Medium Curing Liquid Asphalt (MC-30) - F.O.B. Plant	GAL
E618.2101	Medium Curing Liquid Asphalt (AC-70) – Delivered & Applied	GAL
E618.2102	Medium Curing Liquid Asphalt (AC-70) - F.O.B. Plant	GAL
E618.2201	Medium Curing Liquid Asphalt (MC-250) – Delivered & Applied	GAL
E618.2202	Medium Curing Liquid Asphalt (MC-250) - F.O.B. Plant	GAL
E618.3001	Asphalt Emulsion (RS-1) - Delivered & Applied	GAL
E618.3002	Asphalt Emulsion (RS-1) - F.O.B. Plant	GAL
E618.310101	Asphalt Emulsion (RS-2) - Delivered & Applied	GAL
E618.310102	Asphalt Emulsion (RS-2) - F.O.B. Plant	GAL
E618.310201	Asphalt Emulsion (HFRS-2) - Delivered & Applied	GAL
E618.310202	Asphalt Emulsion (HFRS-2) - F.O.B. Plant	GAL
E618.310203	Asphalt Emulsion (HFRS-2P) - Delivered & Applied	GAL
E618.310204	Asphalt Emulsion (HFRS-2P) - F.O.B. Plant	GAL
E618.320101	Asphalt Emulsion (MS-2) - Delivered & Applied	GAL
E618.320102	Asphalt Emulsion (MS-2) – F.O.B. Plant	GAL
E618.330101	Asphalt Emulsion (HFMS-2) - Delivered & Applied	GAL
E618.330102	Asphalt Emulsion (HFMS-2) – F.O.B. Plant	GAL
E618.3401	Asphalt Emulsion (HFMS-2H) - Delivered & Applied	GAL
E618.3402	Asphalt Emulsion (HFMS-2H) - F.O.B. Plant	GAL
E618.3501	Asphalt Emulsion (SS-1) - Delivered & Applied	GAL
E618.3502	Asphalt Emulsion (SS-1) - F.O.B. Plant	GAL
E618.3601	Asphalt Emulsion (SS-IH) - Delivered & Applied	GAL
E618.3602	Asphalt Emulsion (SS-IH) - F.O.B. Plant	GAL
E618.3801	Asphalt Emulsion (HFMS-2GH) - Delivered & Applied	GAL
E618.3802	Asphalt Emulsion (HFMS-2GH) - F.O.B. Plant	GAL
E618.4001	Catonic Asphalt Emulsion (CRS-1) - Delivered & Applied	GAL
E618.4002	Cationic Asphalt Emulsion (CRS-1) - F.O.B. Plant	GAL
E618.410101	Cationic Asphalt Emulsion (CRS-2) - Delivered & Applied	GAL
E618.410102	Cationic Asphalt Emulsion (CRS-2) - F.O.B. Plant	GAL
E618.410103	Cationic Asphalt Emulsion (CRS-2P) - Delivered & Applied	GAL
E618.410104	Cationic Asphalt Emulsion (CRS-2P) - F.O.B. Plant	GAL

E618.4201	Cationic Asphalt Emulsion (CMS-2) - Delivered & Applied	GAL
E618.4202	Cationic Asphalt Emulsion (CMS-2) - F.O.B. Plant	GAL
E618.4301	Cationic Asphalt Emulsion (CMS-2H) - Delivered & Applied	GAL

Item No.	**Item**	**Pay Unit**
E618.4302	Cationic Asphalt Emulsion (CMS-2H) - F.O.B. Plant	GAL
E618.4401	Cationic Asphalt Emulsion (CSS-1) - Delivered & Applied	GAL
E618.4402	Cationic Asphalt Emulsion (CSS-1) - F.O.B. Plant	GAL
E618.4501	Cationic Asphalt Emulsion (CSS-IH) - Delivered & Applied	GAL
E618.4502	Cationic Asphalt Emulsion (CSS-IH) - F.O.B. Plant	GAL
E618.9901	Asphalt Emulsion Tack Coat (Minimum 500 Gallons per Delivery) - Delivered & Applied	GAL
E618.9902	Asphalt Emulsion Tack Coat (Minimum 500 Gallons per Order) - F.O.B. Plant	GAL
E618.9903	Waiting Time for Asphalt Emulsion Tack Coat Application (Per Hour after First Hour on Project)	Hour
E618.9904	Hand Spray Patching - Additional Charge per Gallon to any Delivered & Applied 618 Item	GAL
E618.9905	Bar Spray Patching - Additional Charge per Gallon to any Delivered & Applied 618 Item	GAL
E618.9906	Additional Cost for Spray Patch Tank Rental	GAL
E618.9907	Additional Cost for Self Propelled Stone Spreader for Full Width Surface Treatment	GAL
E618.9908	Additional Cost for Self Propelled Stone Spreader for Bar Spray Patching	GAL
E618.9909	Additional Cost for Self Propelled Stone Spreader Maximum Charge per Day	DAY
E618.99010	Mixing in Portable Pugmill (MS-2)	GAL
E618.99011	Mixing in Portable Pugmill (HFMS-2)	GAL
E618.99012	HFMS-2GH	GAL
E618.99013	Additional Cost for Mixing in Traveling Plant Mixer (MS-2)	GAL
E618.99014	Additional Cost for Mixing in Traveling Plant Mixer (HFMS-2)	GAL
E618.99015	Additional Cost for Mixing in Traveling Plant Mixer (CMS-2)	GAL
E618.99016	Additional Cost for Mixing in Traveling Plant Mixer (CMS-2H)	GAL
E618.99017	Additional Cost for Mixing in Traveling Plant Mixer with Shoulder Attachment (MS-2)	GAL
E618.99018	Additional Cost for Mixing in Traveling Plant Mixer with Shoulder Attachment (HFMS-2)	GAL
E618.99019	Additional Cost for Mixing in Traveling Plant Mixer with Shoulder Attachment (CMS-2)	GAL
E618.99020	Additional Cost for Mixing in Traveling Plant Mixer with Shoulder Attachment (CMS-2H)	GAL
E618.99021	Additional Cost for Mixing in Traveling Plant Mixer with Shoulder Attachment – Minimum Charge	DAY
E618.99022	Additional Cost for Mixing in Traveling Plant Mixer with Shoulder Attachment - Maximum Charge	DAY
E618.99023	Fiber Reinforced Bituminous Membrane Surface Treatment (1 - 5,000 SY/Day) Fiber Mat Type A	SY
E618.99024	Fiber Reinforced Bituminous Membrane Surface Treatment (1 - 5,000 SY/Day) Fiber Seal Type B	SY
E618.99025	Fiber Reinforced Bituminous Membrane Surface Treatment (1 - 5,000 SY/Day) Option A	SY

E618.99026	Fiber Reinforced Bituminous Membrane Surface Treatment (1 - 5,000 SY/Day) Option B	SY
E618.99027	Fiber Reinforced Bituminous Membrane Surface Treatment (1 - 5,000 SY/Day) Option C	SY
Item No.	**Item**	**Pay Unit**
E618.99028	Fiber Reinforced Bituminous Membrane Surface Treatment (1 - 5,000 SY/Day) Option D	SY
E618.99029	Fiber Reinforced Bituminous Membrane Surface Treatment (1 - 5,000 SY/Day) Option E	SY
E618.99030	Fiber Reinforced Bituminous Membrane Surface Treatment (1 - 5,000 SY/Day) Option F	SY
E618.99031	Fiber Reinforced Bituminous Membrane Surface Treatment (5,001 10,000 SY/Day) Fiber Mat Type A	SY
E618.99032	Fiber Reinforced Bituminous Membrane Surface Treatment (5,001 10,000 SY/Day) Fiber Seal Type B	SY
E618.99033	Fiber Reinforced Bituminous Membrane Surface Treatment (5,001 10,000 SY/Day) Option A	SY
E618.99034	Fiber Reinforced Bituminous Membrane Surface Treatment (5,001 10,000 SY/Day) Option B	SY
E618.99035	Fiber Reinforced Bituminous Membrane Surface Treatment (5,001 10,000 SY/Day) Option C	SY
E618.99036	Fiber Reinforced Bituminous Membrane Surface Treatment (5,001 10,000 SY/Day) Option D	SY
E618.99037	Fiber Reinforced Bituminous Membrane Surface Treatment (5,001 10,000 SY/Day) Option E	SY
E618.99038	Fiber Reinforced Bituminous Membrane Surface Treatment (5,001 10,000 SY/Day) Option F	SY
E618.99039	Fiber Reinforced Bituminous Membrane Surface Treatment (10,001 - 20,000 SY/Day) Fiber Mat Type A	SY
E618.99040	Fiber Reinforced Bituminous Membrane Surface Treatment (10,001 - 20,000 SY/Day) Fiber Seal Type B	SY
E618.99041	Fiber Reinforced Bituminous Membrane Surface Treatment (10,001 - 20,000 SY/Day) Option A	SY
E618.99042	Fiber Reinforced Bituminous Membrane Surface Treatment (10,001 - 20,000 SY/Day) Option B	SY
E618.99043	Fiber Reinforced Bituminous Membrane Surface Treatment (10,001 - 20,000 SY/Day) Option C	SY
E618.99044	Fiber Reinforced Bituminous Membrane Surface Treatment (10,001 - 20,000 SY/Day) Option D	SY
E618.99045	Fiber Reinforced Bituminous Membrane Surface Treatment (10,001 - 20,000 SY/Day) Option E	SY
E618.99046	Fiber Reinforced Bituminous Membrane Surface Treatment (10,001 - 20,000 SY/Day) Option F	SY
E618.99047	Fiber Reinforced Bituminous Membrane Surface Treatment (20,001 - 40,000 SY/Day) Fiber Mat Type A	SY
E618.99048	Fiber Reinforced Bituminous Membrane Surface Treatment (20,001 - 40,000 SY/Day) Fiber Seal Type B	SY
E618.99049	Fiber Reinforced Bituminous Membrane Surface Treatment (20,001 - 40,000 SY/Day) Option A	SY
E618.99050	Fiber Reinforced Bituminous Membrane Surface Treatment (20,001 - 40,000 SY/Day) Option B	SY
E618.99051	Fiber Reinforced Bituminous Membrane Surface	

	Treatment (20,001 - 40,000 SY/Day) Option C	SY
E618.99052	Fiber Reinforced Bituminous Membrane Surface Treatment (20,001 - 40,000 SY/Day) Option D	SY

Item No.	Item	Pay Unit
E618.99053	Fiber Reinforced Bituminous Membrane Surface Treatment (20,001 - 40,000 SY/Day) Option E	SY
E618.99054	Fiber Reinforced Bituminous Membrane Surface Treatment (20,001 - 40,000 SY/Day) Option F	SY
E618.99055	Fiber Reinforced Bituminous Membrane Surface Treatment (40,001 + SY/Day) Fiber Mat Type A	SY
E618.99056	Fiber Reinforced Bituminous Membrane Surface Treatment (40,001 + SY/Day) Fiber Seal Type B	SY
E618.99057	Fiber Reinforced Bituminous Membrane Surface Treatment (40,001 + SY/Day) Option A	SY
E618.99058	Fiber Reinforced Bituminous Membrane Surface Treatment (40,001 + SY/Day) Option B	SY
E618.99059	Fiber Reinforced Bituminous Membrane Surface Treatment (40,001 + SY/Day) Option C	SY
E618.99060	Fiber Reinforced Bituminous Membrane Surface Treatment (40,001 + SY/Day) Option D	SY
E618.99061	Fiber Reinforced Bituminous Membrane Surface Treatment (40,001 + SY/Day) Option E	SY
E618.99062	Fiber Reinforced Bituminous Membrane Surface Treatment (40,001 + SY/Day) Option F	SY

SECTION E619 – WORK ZONE TRAFFIC CONTROL

E619-1 DESCRIPTION.

Section 619 of the NYSDOT Standard Specifications dated May 1, 2008, and all addenda shall apply except as modified herein.

619-5 BASIS OF PAYMENT

619-5.01 General. The price bid shall include all materials delivered – NOT installed. Materials shall be F.O.B. to location designated by the ordering agency. No payment will be made for damage caused by vehicle accidents, vandalism, or any other similar causes.

Payment shall be made under:

Item No.	Item	Pay Unit
E619.0401	Type III Construction Barricade per Day	Each
E619.0402	Type III Construction Barricade per Week	Each
E619.0403	Type III Construction Barricade per Month	Each
E619.110201	Portable, Variable Message Sign (PVMS) (LED) Per Day	Each
E619.110202	Portable, Variable Message Sign (PVMS) (LED) Per Week	Each
E619.110203	Portable, Variable Message Sign (PVMS) (LED) Per Month	Each
E619.170101	Temporary Concrete Barrier (Unpinned) (10 Lin Ft. Length) per Day	Each
E619.170102	Temporary Concrete Barrier (Unpinned) (10 Lin Ft. Length) per Week	Each
E619.170103	Temporary Concrete Barrier (Unpinned) (10 Lin Ft. Length) per Month	Each
E619.170201	Temporary Concrete Barrier (Unpinned) (10 Lin Ft. Length) with Warning Lights per Day	Each
E619.170202	Temporary Concrete Barrier (Unpinned) (10 Lin Ft. Length) with Warning Lights per Week	Each
E619.170203	Temporary Concrete Barrier (Unpinned) (10 Lin Ft. Length) with Warning Lights per Month	Each
E619.180201	Temporary Impact Attenuator - Redirective (Test Level 2) per Day	Each
E619.180202	Temporary Impact Attenuator - Redirective (Test Level 2) per Week	Each
E619.180203	Temporary Impact Attenuator - Redirective (Test Level 2) per Month	Each
E619.27	Mailboxes	Each

SECTION 620 – BANK AND CHANNEL PROTECTION

Section 620 of the NYSDOT Standard Specifications dated May 1, 2008 and all addenda shall apply.

Payment shall be made under:

Item No.	Item	Pay Unit
620.04	Stone Filling (Medium)	CY
620.05	Stone Filling (Heavy)	CY
620.06	Dry Rip Rap	CY

SECTION 621 - CLEANING CULVERTS, DRAINAGE STRUCTURES AND EXISTING ROADSIDE SECTIONS

Section 621 of the NYSDOT Standard Specifications dated May 1, 2008, and all addenda shall apply.

Payment will be made under:

Item No.	Item	Pay Unit
621.01	Cleaning Culverts with Span of 50 in. or Less	Linear Foot
621.02	Cleaning Culverts with Span of More than 50 in.	Linear Foot
621.03	Cleaning Closed Drainage Systems	Linear Foot
621.04	Cleaning Drainage Structures	Each
621.05	Clean, Grade and Shape Existing Roadside Section	Linear Foot

SECTION 627 - CUTTING PAVEMENT

627-1 DESCRIPTION. The contractor shall cut existing asphalt pavement, concrete pavement, asphalt surface course, or asphalt concrete overlay on concrete pavement at the locations indicated and detailed on the plans and as directed by the Engineer.

627-2 MATERIALS. None specified.

627-3 CONSTRUCTION DETAILS. Existing pavement and overlay shall be cut perpendicular to the roadway surface along neat lines, and to the depth indicated on the plans and typical sections, using appropriate equipment. After the pavement has been cut through, the Contractor may use pry bars, pneumatic tools or other methods, to pry loose the pavement to be removed from the pavement that is to remain. A pavement breaker may be used to break up the pavement to be removed after the pavement has been completely cut through and completely free from the pavement to remain.

When pavement cutting is called for in the Contract documents, if a neat vertical face with minimal shatter is obtained by performing an adjacent operation (such as milling) which eliminates the need to perform a separate pavement cutting operation, payment will be made for both the pavement cutting item and the item for the adjacent operation.

Any existing pavements and curbs not indicated to be removed that are damaged by the contractor's operations, shall be repaired at no additional cost to the State. Pavement cutting that the contractor chooses to do for his/her own convenience shall not receive any additional payment from the State.

627-4 METHOD OF MEASUREMENT. The quantity to be measured will be the number of feet of pavement cutting satisfactorily completed.

627-5 BASIS OF PAYMENT. The unit price bid per foot of pavement cutting shall include the cost of all labor, materials, and equipment necessary to satisfactorily complete the work. Payment for prying, breaking, removal and disposal of cut pavement shall be made through other appropriate items.

Payment will be made under:

Item No.	Item	Pay Unit
627.50140008	Cutting Pavement	LF

SECTION E636, ITEM E636.0101 – EMERGENCY REPAIRS: HIGHWAY

636-1 DESCRIPTION. Under this pay item the contractor will be compensated for overhead and profit in the cost of the work performed under a force account. The purpose of this pay item is to establish a percentage that will be multiplied against the cost of force account to calculate the amount due the contractor for overhead and profit. The response time to start work will be two working days from written notification by the County. NYSDOT Standard Specifications Sections 109-05B and 109-05C will be used as guidance for record keeping. Please refer to Item 13 in the "Notice to Bidders Specifications and Proposal Form" at the beginning of this document.

636-2 MATERIALS. The materials and methods used for the repair shall meet the requirements of the Standard Specifications as amended.

636-3 CONSTRUCTION DETAILS. Construction detail requirements shall be determined at the time the "scope of work" is defined by the Engineer.

636-4 METHOD OF MEASUREMENT. Under this item the contractor is to enter as the bid, a percentage for overhead and profit which will be multiplied against the actual cost of force account to determine the amount due the contractor for a 2 day response.

636-5 BASIS OF PAYMENT. The actual overhead and profit payment will be determined by multiplying the contractor's bid percentage against the cost of force account. NYSDOT Force Account Forms will be used to report the value of this work.

The maximum bid for this item is limited to 20%.

An additional amount of overhead and profit on subcontractor's work services and fees will be 5%. This item does not require that the subcontractor accept the prime contractor overhead and profit rate, but does limit them to a maximum of 20% markup.

Item E636.0101 – Emergency Repair: Highway

Percentage Bid _____**Percent**

SECTION E636, ITEM E636.0102 – EMERGENCY REPAIR: BRIDGE

636-1 DESCRIPTION. Under this pay item the contractor will be compensated for overhead and profit in the cost of the work performed under a force account. The purpose of this pay item is to establish a percentage that will be multiplied against the cost of force account to calculate the amount due the contractor for overhead and profit. The response time to start work will be two working days from written notification by the County. NYSDOT Standard Specifications Sections 109-05B and 109-05C will be used as guidance for record keeping. Please refer to Item 13 in the "Notice to Bidders Specifications and Proposal Form" at the beginning of this document.

636-2 MATERIALS. The materials and methods used for the repair shall meet the requirements of the Standard Specifications as amended.

Engineering Services if required under this item shall be **Qualification Based Selection (QBS)**. The Engineer will be selected jointly by the Contractor and the County.

A. The contractor will be required to submit to the Owner the name of the project Superintendent with his qualifications and bridge experience. The owner reserves the right to reject a superintendent who does not meet their needs.

636-3 CONSTRUCTION DETAILS. Construction detail requirements shall be determined at the time the "scope of work" is defined by the Erie County Department Public Works Division of Highways or Bridge Owner.

636-4 METHOD OF MEASUREMENT. Under this item the contractor is to enter as the bid, a percentage for overhead and profit which will be multiplied against the actual cost of force account to determine the amount due the contractor for a 2 day response.

636-5 BASIS OF PAYMENT. The actual overhead and profit payment will be determined by multiplying the contractor's bid percentage against the cost of force account. NYSDOT Force Account forms will be used to report the value of this work.

The maximum bid for this item is limited to 20%.

An additional amount of overhead and profit on subcontractor's work services and fees will be 5%. This item does not require that the subcontractor accept the prime contractor overhead and profit rate, but does limit them to a maximum of 20% markup.

Item E636.0102 – Emergency Repair: Bridge

Percentage Bid _____**Percent**

SECTION 636, ITEM E636.0103 – AS DIRECTED BRIDGE MAINTENANCE AND REPAIR WORK

This item will be used to perform maintenance work or repairs to bridges and culverts that is not of an emergency nature, but which have been flagged or had a maintenance request issued after an inspection. Examples of this work are: Bridge Joint Replacement, Structural Steel Repairs, Concrete Repairs, Bridge Railing Repairs or Replacement, This is not an all-inclusive list.

636-1 DESCRIPTION. Under this pay item the contractor will be compensated for overhead and profit in the cost of the work performed under a force account. The purpose of this pay item is to establish a percentage that will be multiplied against the cost of force account to calculate the amount due the contractor for overhead and profit. The response time to start work will be **ten (10)** working days from written notification by the County.

636-2 MATERIALS. The materials and methods used for the repair shall meet the requirements of the Standard Specifications as amended.

Engineering Services if required under this item shall be **Qualification Based Selection (QBS)**. The Engineer will be selected jointly by the Contractor and the County.

A. The contractor will be required to submit to the Owner the name of the project Superintendent with his qualifications and bridge experience. A minimum of 5 year experience in managing and completing project of this nature shall be required. This will have to be submitted to Erie County in writing prior to the County assigning work. The owner reserves the right to reject a superintendent or company who does not meet their needs.

636-3 CONSTRUCTION DETAILS. Construction detail requirements shall be determined at the time the "scope of work" is defined by the Erie County Department Public Works Division of Highways or Bridge Owner.

636-4 METHOD OF MEASUREMENT. Under this item the contractor is to enter as the bid, a percentage for overhead and profit which will be multiplied against the actual cost of force account to determine the amount due the contractor for a **ten (10)** day response.

636-5 BASIS OF PAYMENT. The actual overhead and profit payment will be determined by multiplying the contractor's bid percentage against the cost of force account. The force account billing shall follow NYSDOT forms and methods. Please refer to Item 13 in the "Notice to Bidders Specifications and Proposal Form" at the beginning of this document. The maximum bid for this item is limited to 20%.

An additional amount of overhead and profit on subcontractor's work services and fees will be 5%. This item does not require that the subcontractor accept the prime contractor overhead and profit rate, but does limit them to a maximum of 20% markup.

Item E636.0103 – As Directed Bridge Maintenance and Repair Work

Percentage Bid _____**Percent**

SECTION E645 – SIGNS

E645-1 DESCRIPTION.

Section 645 of the NYSDOT Standard Specifications dated May 1, 2008, and all addenda shall apply except as modified herein.

Type A Sign Posts. Unit bid price will be for furnishing and delivering only. Delivery shall be no later than 30-45 days after receipt of order. Bid price shall be F.O.B. to designated destination, tailgate delivery, including technical advice/service and materials certification.

Reflective Sheeting for Signs. Delivery shall be no later than 30-45 days after receipt of order. Bid price shall be F.O.B. to designated destination, tailgate delivery, including technical advice/service and materials certification.

The bidder shall submit, if requested by the ordering agency, a representative sample designated by the ordering agency. The sample shall become the property of and paid for by the ordering agency if the bidder becomes the contractor.

Any deviation from specifications listed herein must be clearly pointed out; otherwise, it will be considered ordered in strict compliance with these specifications, and successful bidder will be held responsible therefore deviations must be explained in detail.

Bidders shall be full line suppliers. Products bid shall be compatible with this Erie County Department of Public Work's sign shop handling, application and screening procedures. Incomplete bid(s) documents and/or incompatible products shall not be considered for award.

Information and descriptive literature. Bidders are to furnish all information when requested. Further, as may be specified elsewhere, each bidder must submit with his proposal cuts, sketches, descriptive literature and/or complete specifications covering the products offered. Reference to previous literature submitted with a previous bid will not satisfy this provision.

ASTM Sheeting for Permanent Signing - Type (EG) Type IX (VIP). This specification covers flexible white or colored, wide angle retroflective sheeting, (hereinafter called sheeting), tape and related processing materials designed to enhance nightime visibility of traffic control signs and objects. The sheeting shall consist of enclosed glass bead lens (Type I) encapsulated glass bead elements adhered to a synthetic resin and encapsulated by a flexible transparent plastic that has a smooth outer surface. (Type III) and a prismatic lens elements with a distinctive interlocking diamond seal pattern and datum orientation marks visible from the face of a smooth surface (Type IX). The sheeting shall have a pre coated adhesive protected by an easily removable liner.

The sheeting shall be part of a family of matched component products required for the manufacture and imaging of permanent traffic control signs as described in section 4. Only section 2.0, section 6.2.4, section 6.5 and section 7.2.1 cover printed colored areas of signs.

1.0 NOTICE: *This specification contains* a *sheeting manufacturer's field performance obligation paragraph* 7.2 *which shall apply only when included and made part* of a *bid request, proposal, and/or purchase agreement* of *Erie County Department* of *Public Works.*

2.0 PREQUALIFICATION AND PERFORMANCE HISTORY

Materials (sheeting, process colors, overlay films) shall be considered for use only when, in the opinion of Erie County Department of Public Works, .sufficient evidence exists to ensure that the materials and services offered can reliably conform to this specification. The sheeting

manufacturer shall provide evidence of performance and suitability for use in accordance with Erie County Department of Public Works Qualified Products Procedures.

2.1 Prequalification

All prospective bidders are hereby notified that the material (sheeting, process colors, overlay films) proposed for submission or for use in production of finished traffic control devices shall be a material of manufacture and product code or deSignation shown on the list of approved manufacturers of materials covered by this specification maintained by Erie County Oepartment of Public Works.

Prospective bidders or suppliers who wish to establish a performance history and prequalification for materials (sheeting, process colors, overlay films) governed by this specification should contact Erie County Department of Public Works for instructions on samples and information required for testing.

2.2 Performance History

The sheeting manufacturer shall provide test data showing that representative combined production material (sheeting, process inks, overlay films) of the type to be supplied has met the requirements for 36 months, Type III (HI) and Type IX (VIP) and 24 months Type I (EG) of accelerated outdoor weathering described in section 6.10

This data shall be gathered by the contracting agency's own testing facility in accordance with ASTM D 4956 or an independent Erie County Department of Public Works, such as AASHTO's National Transportation Product Evaluation Program (NTPEP).

The data submitted shall cover both the retroreflective sheeting and process colors and/or overlay films manufactured by the sheeting manufacturer in standard traffic colors. The process colors and overlay films shall be tested with the sheeting to which they are intended to be applied. The data collection shall have been completed no more than 5 years prior to the offer.

The materials may also be considered for qualification if, in the opinion of the Engineer, sheeting materials of the type to be supplied has been used successfully in 5 other signing programs of similar type and size that are in similar climatic conditions for at least 5 years.

To be considered an equal alternate to an existing, qualified product, a candidate product must be used and weathered along-side the control or benchmark material to eliminate any bias in the exposure procedures.

3.0 CLASSIFICATION AND CONFORMANCE

The sheeting shall conform to FP-96, AASHTO M 268 and ASTM D4956 adhesive class 1 and 2 for Type I and Type III only and shall further be required by the plans or in the invitation to bid to conform to one of the following types. The sheeting is intended for shop production of new stationary traffic control signs or objects, exclusive of those used for construction and maintenance work zones.

The sheeting shall have either a precoated pressure sensitive adhesive (Class 1) or a tack-free adhesive (Class 2) activated by heat (Type I and III only) applied in a heat vacuum applicator in a manner recommended by the sheeting manufacturer. Both adhesive classes shall be protected by an easily removable. liner.

3.1 Prepunched sheeting (Type I and III only). Prepunched sheeting is intended for use on stationary traffic control signs and objects; it is Class 1 sheeting, pre punched for use in electronic cutting devices.

The sheeting shall have a precoated pressure sensitive adhesive (Class 1).

4.0 ITEMS TO BE INCLUDED IN BIDS

4.1 Process Colors

4.1.1 The manufacturer of the sheeting shall manufacture and offer process colors in standard traffic colors, clears and thinners recommended for the sheeting to meet the performance requirements of this specification. The sheeting manufacturer shall further be responsible for technical assistance in the use of these colors in accordance with Section 8, below.

4.1.2 The process colors shall be a single line of traffic colors which: may be applied before and after sheeting is applied to a substrate; require no component premixing; and will air dry for packing in 3 hours or less and requires no clear coating.

4.1.3 The sheeting manufacturer shall, upon request, provide custom color match formulas from the color series within 7 days at no charge to Erie County Department of Public Works.

4.2 Slip Sheet. Slip sheet paper recommended by the sheeting manufacturer for surface protection during heat vacuum application or for use in packaging, storing or shipping shall be furnished at no additional charge. Slip sheet paper shall be supplied in rolls by the manufacturer, in at least equal square footage and in the same widths as the sheeting supplied.

4.3 Temperature Indicators: The manufacturer at no additional charge shall furnish expendable temperature indicators recommended by the sheeting manufacturer for control and calibration of proper application temperature.

4.4 Washers: Washers recommended by the sheeting manufacturer to protect the sign surface from damage by bolts or other fasteners shall be furnished by the manufacturer at no additional charge.

4.5 Overlay Films. The sheeting manufacturer shall also manufacturer colored acrylic imaging films and clear protective overlays, which are compatible with the sheetings, and when used in accordance with the sheeting manufacturer's instructions, shall not lessen the warranty term as described in section 7.2 .

5.0 TEST PANELS AND TEST CONDITIONS

Unless otherwise specified herein, sheeting shall be supplied to test panels in accordance with ASTM 0 4956 section 8.2 and test conditions shall conform to ASTM 04956 section 8.1.

6.0 REQUIREMENTS

6.1 Color Requirements. Color shall be as specified and shall conform to the requirements of Table I. Conformance to color requirements shall be determined spectrophotometrically in accordance with ASTM E 1164 for retroreflective materials. CIE Tristimulus values for the 2° observer and illuminant 065 shall be calculated in accordance with the ASTM E 308.

Table I - Type I
(Color Specifications Limits* and Reference Standards)

	1		2		3		4		Daytime Luminence Factor Limit (Y%)	
Color	**x**	**y**	**x**	**y**	**x**	**y**	**x**	**y**	**Min.**	**Max.**
White	.303	.300	.368	.366	.340	.393	.274	.329	27.0	
Yellow	.498	.412	.557	.442	.479	.520	.438	.472	15.0	40.0
Red	.613	.297	.708	.292.	.636	.364	.558	.352	2.5	11.0
Blue	.066	.216	.190	.255	.244	.210	.144	.038	1.0	10.0
Brown	.445	.353	.604	.396.	.556	.443	.445	.386	3.0	9.0
Green	.030	.398	.166	.364	.286	.443	.201	.794	3.0	8.0

Table I - Type III
(Color Specifications Limits* and Reference Standards)

	1		2		3		4		Daytime Luminence Factor Limit (Y%)	
Color	**x**	**y**	**x**	**y**	**x**	**y**	**x**	**y**	**Min.**	**Max.**
White	.303	.300	.368	.366	.340	.393	.274	.329	27.0	
Yellow	.498	.412	.557	.442	.479	.520	.438	.472	15.0	40.0
Red	.613	.297	.708	.292.	.636	.364	.558	.352	2.5	11.0
Blue	.066	.216	.190	.255	.244	.210	.144	.038	1.0	10.0
Brown	.445	.353	.604	.396.	.556	.443	.445	.386	3.0	9.0
Green	.030	.398	.166	.364	.286	.446	.201	.794	3.0	8.0

Table I - Type IX
(Color Specifications Limits and Reference Standards)

	1		2		3		4		Daytime Luminence Factor Limit (Y%)	
Color	**x**	**y**	**x**	**y**	**x**	**y**	**x**	**y**	**Min.**	**Max.**
White	.305	.305	355	355	.335	.375	.285	.325	40.0	
Yellow	.487	.423	.545	.454	.465	.534	.427	.483	24.0	45.0
Red	.690	.310	.595	.315	.569	.341	.655	.345	3	15
Blue	.078	.171	.150	.220	.210	.160	.137	.038	1.0	10.0
Green	.030	.398	.166	.364	.286	.446	.201	.794	3.0	9.0
*Florescent Yellow/Green	.039	.610	.460	.540	.421	.486	.368	539	60.0	--
*Florescent Yellow	.521	.424	.557	.442	.479	.520	.454	.491	40.0	--

*The four pairs of chromaticity coordinates determine the acceptable color in terms of the CIE 1931 standard colorimetric system measured with standard illumination Source D65.

6.1 .1 Fluorescence Requirements

6.1.2 Fluorescence Test. Conformance to fluorescence luminance factor requirements in Tables II and IV, shall be determined instrumentally on sheeting applied to aluminum test panels, using a 2-monochromator spectrophotometer employing annular 45/0 (or equivalent 0/45) illuminating and viewing geometry-1 2 The fluorescence luminance factor shall be calculated from the fluorescence spectral radiance factors computed for illuminant 065 in accordance with ASTM E-308 "Practice for Computing the Colors of Objects by Using the CIE System" for the CIE 1931 (2°) standard colorimetric observer. The measurements shall be made on a Labsphere BFC-450 Bispectral Fluorescence Calorescence Colorimeter or equivalent.

Table II
Minimum Florescence Luminance Factor – New Sheeting

SHEETING TYPE	**Florescent Luminance Factor Limit, Y^F**
	Min.
Florescent Yellow/Green	35%
Fluorescent Yellow	25%

6.2 Coefficient of Retroreflection: The coefficients of retroreflection shall be determined in accordance with ASTM E-810, for the minimum requirements of Table III. This table contains "core" values as found in ASTM D 4956, as well as supplemental values at 0.1° and 1.0° observation and 45° entrance to fully characterize sheeting

performance throughout its expected range of use.

6.2.1 Units: Coefficent of retoreflection shall be specified in units of candelas per footcandle per square foot.

6.2.2 The observation angles shall be 0.1°, 0.2°, 0.5° and 1.0°

6.2.3 The entrance angles shall be -4°, 30° and 45°.

6.2.4 For screen printed transparent colored areas or transparent colored overlay films on white sheeting, the coefficients of retroflection shall not be less than 70% of the values for corresponding color in Table III (Type I, III). For Type IX the ratios of the Ra for the white to the Ra for the color, when measured at 0.2° observation, -4° entrance, and 0° rotation, shall be 5:1 to 15:1 for the red, and not less than 5::1 for blue and green.

6.3 Specular Gloss: The retroreflective sheeting shall have an 85° specular gloss of not less than 40 when tested in accordance with ASTM D 523.

Table III (Type I)
Minimum Coefficient of Retroreflection
(cd/lux/m²)

White	-4.0	30.0	45.0
0.1	75	35	9
0.2	70	30	8
0.5	30	15	7
1.0	12	9	4

Green	-4.0	30.0	45.0
0.1	10	5	2
0.2	9	3.5	1.5
0.5	4.5	2.2	0.5
1.0	1.8	1.6	0.4

Yellow	-4.0	30.0	45.5
0.1	53	23	5
0.2	50	22	4.5
0.5	25	13	4
1.0	8.5	5.5	2

Blue	-4.0	30.0	45.0
0.1	4.2	2	0.8
0.2	4	1.7	0.6
0.5	2	0.8	0.5
1.0	0.7	0.6	0.2

Red	-4.0	30.0	45.0
0.1	15	6.2	1
0.3	14	6	0.6
0.5	2.4	1	.04
1.0	2.4	1	0.4

Brown	-4.0	30.0	45.5
0.1	1.1	1.1	0.5
0.2	1	0.3	0.2
0.5	0.3	0.2	0.1
1.0	0.2	0.1	0.1

Table III (Type III)
Minimum Coefficient of Retroreflection

(cd-luxm²)

White	-4.0	30.0	45.0
0.1	300	225	100
0.2	250	175	95
0.5	95	70	55
1.0	10	9.5	9.0

Green	-4.0	30.0	45.0
0.1	5-	40	15
0.2	45	30	12
0.5	15	12	10
1.0	1.0	0.8	0.5

Yellow	-4.0	30.0	45.5
0.1	200	150	60
0.2	170	135	50
0.5	62	60	40
1.0	9.0	8.5	8.0

Blue	-4.0	30.0	45.0
0.1	24	14	7.0
0.2	20	11	6.0
0.5	7.5	5.0	4.0
1.0	0.5	0.3	0.1

Red	-4.0	30.0	45.5
0.1	54	40	15
0.2	45	30	12
0.5	15	12	10
1.0	2.0	1.5	1.0

Brown	-4.0	30.0	45.0
0.1	14	10	3.0
0.2	12	8.5	2.8
0.5	5.0	3.5	2.5
1.0	0.5	0.3	0.1

Table III (Type IX)
Minimum Coefficient of Retroreflection
(cd/lux/m²)

White	-4.0	30.0	45.0
0.1	660	430	120
0.2	380	225	90
0.5	275	135	35
1.0	80	45	10

Green	-4.0	30.0	45.0
0.1	80	45	12.5
0.2	45	28	9.8
0.5	32	16	3.5
1.0	9	6	1.6

Yellow	-4.0	30.0	45.5
0.1	565	315	90
0.2	300	180	70
0.5	220	100	27
1.0	60	35	8.8

Blue	-4.0	30.0	45.0
0.1	42	22	6
0.2	22	14	4.5
0.5	17	8	1.5
1.0	4.5	3	.8

Table III (Type IX) continued
Minimum Coefficient of Retroreflection
(cd/lux/m²)

Red	-4.0	30.0	45.5
0.1	165	110	24
0.2	98	65	26
0.5	70	32	10
1.0	20	11	3

Florescent Yellow Green

FYG	-4.0	30.0	45.0
0.1	14	10	3.0
0.2	12	8.5	2.8
0.5	5.0	3.5	2.5
1.0	0.5	0.3	0.1

Florescent Yellow

FY	-4.0	30.0	45.0
0.1	400	250	70
0.2	240	150	55
0.5	165	75	15
1.0	45	24	6

6.5 Color Processing: The retroreflective sheeting shall be designed to work in concert with recommended imaging systems. Color processing with compatible transparent and opaque process colors shall be possible in accordance with the sheeting manufacturer's recommendation at temperatures of 60°to 100°F (16° to 38°C) and relative humidity of 20% to 80*%.* The sheeting shall be heat resistant and permit force curing without staining of applied or unapplied sheeting at temperatures recommended by the sheeting manufacturer.

6.6 Shrinkage: The retroreflective sheeting shall comply with the shrinkage requirements contained in ASTM D 4956 section 7.6

6.7 Flexibility: The reflective sheeting with the liner removed and conditioned as in 5.1 shall be sufficiently flexible to show no cracking when slowly bent, in one second's time around a *1/8* inch mandrel with adhesive contacting the mandrel. Talcum powder shall be spread on the adhesive to prevent sticking to the mandrel.

6.8 Adhesive: The retroreflective sheeting shall comply with the liner removal and adhesion to requirements contained in ASTM D4956 sections *7.8* and 7.9

6.9 Impact Resistance: The sheeting, applied according to the manufacturer's recommendations to a cleaned, etched aluminum panel of alloy 6061-T6, 0.04" (0.10cm) by" (7.6 cm) by 5" (12.7 cm) and conditioned as in 5.1, shall show no cracking when the face of the panel is subjected to an impact of a 2 inch diameter steel ball (1.19 Ibs., 0.54 kg) dropped from a height of 8*.5* inches (21.6 cm) through a 2.125 inch (5.4 cm) tube.

6.10 Resistance to Accelerated Weathering: The retroreflective surface of the sheeting shall be weather resistant and show no appreciable cracking, blistering, crazing or dimensional change after three years (Type III, IX,), two years (Type I) unprotected

outdoor exposure conducted according to ASTM G7 and inclined at 45° from the horizontal facing the equator. After cleaning, the coefficient of retroreflection shall not be less than *80%* (Type III (Type IX), 50% (Type I) of the values in Table III and the colors shall conform to paragraph 6.10, 6.11, and Table IV.

Following weathering exposure, gently wash panels using a soft cloth or sponge and clean water or a dilute solution (1 % by weight in water, maximum concentration) of a mild detergent. After washing, rinse thoroughly with clean water and blot dry with a soft clean cloth. After washing and drying, condition the panels at room temperature for at least two hours prior to conducting any property measurements.

6.10.1 Shows "good" colorfastness or better when tested as installed.

6.10.2 Shows no appreciable evidence of cracking, scaling, pitting, blistering, edge lifting or curling or more than *1/32* inch *(0.08* cm) shrinkage or expansion.

6.10.3 Retain not less than 80° (Type III) (Type IX), 50% (Type I) of the coefficient of retroreflection values specified in Table III.

Retroreflective performance measurements after weather exposure shall be made at all observation and entrance angles. Sheeting shall be measured using the average values at 0° & 90° rotation (Type IX). Where more than one panel of a color is measured, the coefficient of retroreflection shall be the average of all the determinations.

6.10.4 Not to be removable from the aluminum panels without damage.

6.11 Colorfastness One specimen, exposed and prepared as specified in 6.9 shall be wet out with a mild detergent and water solution and compared with a similarly treated unexposed specimen under natural (North sky) daylight or artificial daylight having a color temperature of 7500° Kelvin. The colorfastness shall be evaluated as follows:

Excellent	- no perceptible change in color
Good	- Perceptible bit no appreciable change I color
Fair	- appreciable change in color

Appreciable change in color means a change that is immediately noticeable in comparing the exposed specimen with the original comparison specimen. If closer inspection or a change of angle of light is required to make apparent a slight change in color, the change is not appreciable.

TABLE IV **Minimum Fluorescence Luminance Factor** **(All measurements shall be made after cleaning** **According to manufacturer's recommendations)**			
Color	Warranty Period	Minimum Florescence Luminance Factor Y^F%	Minimum Total Luminance Factor Y%
Fluorescent Yellow Green	10 Years	20%	35%
Fluorescent Yellow	10 Years	20%	35%

6.12 Optical Stability. Three pieces of retroreflective sheeting applied to test panels and conditioned as in Section 5.1 shall each first *have* their photometric properties characterized by measuring the coefficients of retroreflection according to the provisions in Section 6.3 at all test geometries shown in Table III. These panels shall then be exposed in an air circulating oven at 170 ± 5°F (770±3°C) for a period of 24 hours. After exposure the panels shall be allowed to condition according to the provisions of Section 5.1 These panels will again be characterized for photometric properties by measuring the coefficients of retroreflection according to the provisions of Section 6.3 at all test geometries measured before exposure.

The coefficients of retroreflection measured after exposure shall be between 85% and 115% of the values measured before exposure for each of the three samples.

6.13 Fungus resistance: The retroreflective sheeting shall comply with the supplementary requirements contained in section S1 of ASTM D 4956.

6.14 Resistance to Corrosion. The reflective sheeting applied to a test panel and conditioned as in 5.1 shall show no loss of adhesion, appreciable discoloration or corrosion and after cleaning shall retain a minimum of 80% of the original coefficient of retroreflection when measured at 0.2° observation angle, -40 entrance angle, and 0° rotation angles after 1000 hours to a 5% concentration salt spray at 35°C (95°F) when tested in accordance with ASTM B 117.

6.15 General Characteristics and Packaging: The retroreflective sheeting as supplied shall be of good appearance, free from ragged edges, cracks and extraneous materials and shall be furnished in either rolls or sheets.

When furnished in continuous rolls, the number of splices shall not be more than two per 50 yards of material, with a maximum of three pieces in any 50-yard length. Splices shall be butted or overlapped and shall be suitable for continuous application as furnished.

The sheeting shall be packaged in accordance with commercially accepted standards. Each carton shall clearly stipulate the brand, quantity, size, lot or run number, color and type adhesive. Stored under normal conditions the

retroreflective sheeting as furnished shall be suitable for use for a minimum period of one year.

7.0 PERFORMANCE REQUIREMENTS AND OBLIGATIONS

7.1 Certification. The sheeting manufacturer shall submit with each lot or shipment, a certification that states the material supplied will meet all the requirements listed herein.

7.2 Field Performance Requirements

7.2.1 Sheeting processed and applied to sign blank materials in accordance with sheeting manufacturer's recommendations, shall perform effectively for the number of years stated in Table III of this specification. The retrorefledive sheeting will be considered unsatisfactory if it has deteriorated due to natural causes to the extent that (1) the sign is ineffective for its intended purpose when viewed from a moving vehicle under normal day and night driving conditions; or (2) the coefficient of retroreflection is less than the minimum specified for that sheeting during that period listed.

Type I: 50% of values listed in Table III Type 1 after 7 years

Type III: 85% of values listed in Table III after 7 years and 80% of values listed in Table III after 10 years.

Type IX: 80% of values listed in Table III Type IX after 7 years and 70% of values listed in Table III Type IX after 10 years.

Failure of process colors or overlay films provided and/or sold for use on recommended sheeting shall constitute a failure of entire sign and shall be replaced under manufacturer's replacement obligations (7.3).
For screen printed transparent colored areas or transparent colored overlay films on white sheeting, the coefficients of retroreflection shall not be less than 70% of the values for the corresponding color in Table III. (Type I, III). For Type IX, the ratios of the RA for the white to the RA for the color, when measured at 0.2° observation, -4° entrance, and 0° rotation, shall be 5:1 to 15:1 for the red, and not less than 5:1 for blue and green.
All measurements shall be made after sign cleaning according to sheeting manufacturer's recommendations.

7.3 Sheeting Manufacturer's Replacement Obligation. Where it can be shown that retroreflective signs, supplied and used according to the sheeting manufacturer's recommendations, have not met the performance requirements of Section 7.2, the sheeting manufacturer shall cover restoration costs as follows for sheetings shown to be unsatisfactory during:

7.3.1 The entire 10 years (Type III, IX), 7 years (Type I): the sheeting manufacturer will replace the sheeting required to restore the sign surface to its original effectiveness.

7.3.2 In addition, during the first 7 years (Type III, IX) the sheeting manufacturer will cover the cost of restoring the sign surface to its original effectiveness at no cost to Erie County Department of Public Works for material and labor.

7.4 Erie County Department of Public Works Obligation. Erie County Department of Public Works shall be responsible for requiring the dating of all signs at the time of application. That date constitutes the start of the field performance obligation period.

8.0 TECHNICAL ASSISTANCE REQUIREMENT

The manufacturer supplying the retroreflective sheeting requirements shall provide at no charge the services of a qualified technician for instruction and training at the primary sign manufacturing facility designated by Erie County Department of Public Works. This instruction shall be provided bi-annually and at the request of Erie County Department of Public Works. Instruction shall include but not be limited to training films, material application, equipment operation, silk screening techniques, packaging, storage, and other proven sign shop practices as they apply to the reflective sheeting supplied by the manufacturer, and to assure that the resulting signs can comply with the applicable specifications.

Additional on-site technical assistance by the manufacture supplying the retroreflective sheeting shall be provided at each of the sign shops designated in the bid invitation. This assistance shall be provided annually and at the request of Erie County Department of Public Works.

The sheeting manufacturer shall, without additional cost to Erie County Department of Public Works, provide the sign shops with competent technical service and product information, including service on screen printing problems with the inks furnished or recommended by the manufacturer for their sheeting. The manufacturer supplying the retrorefiective sheeting shall provide technical assistance for their recommended sheeting application equipment. The manufacturer shall certify that trained personnel will be available on 72 hours notice to render such service to facilitate the manufacturer of finished signs. "Service" is understood to mean the capability of calibration and troubleshooting, as well as the training and retraining of personnel as required. In addition, a manufacturer's representative shall be available on site within 24-hoour notice to assess and advise on any manufacturing difficulty that arises.

9.0 APPLICABLE DOCUMENTS

The following documents, of the issues in effect on the date of invitation for bids or request for proposal form a part of this specification to the extent specified herein.

9.1 ASTM Standards

- B 209 Specification for Aluminum and Aluminum Alloy Sheet and Plate.
- D 523 Standard Method for Test for Specular Gloss.
- D 4956 Standard Specification for Retrorefiective Sheeting for Traffic Control.
- E 284 Standard Definition of terms Relating to Appearance of Materials.
- E 308 Standard Method for computing the colors of objects by using the CIE system.

- E 810 Standard Test Method for Coefficient of Retrorefiection of Retroreflective Sheeting.
- E 1164 Standard Practice for obtaining spectrophotometric data for object color evaluation.

9.2 Other Standards

- AASHTO M 268 Standard Specification for Retroreflective Sheeting for Traffic Control
- FHWA FP-96 Standard Specifications for Construction of Roads and Bridges on Federal Highway Projects.

Equipment

Equipment that is deemed necessary to properly apply sheeting materials according to the manufacturer's recommendations, and in accordance with current sign shop practices, will be supplied free of charge during the life of the contract period. A minimum of two (2) 48" HSRA with air cylinders will be required to be on site within 30 days of contract award.

E645-2 MATERIALS

General. Sheeting shall consist of rolls of good materials to be used in the manufacturer of standard traffic signs. All necessary items needed for the manufacturer of these signs, such as inks, and acrylic overlay films must be 3 year NTPEP tested. Pricing must be included on any equipment or parts of equipment that are listed.

Galvanized Sign Post – Perforated (Unistrut or Equal). Material to be of square stock perforated four sides. Holes at 3/8” diameter at 1” on centers, 12 gage. Material fabricated to be telescopic to each other. All material to be delivered to the Lancaster Sign Shop.

Type I Engineer Grade Retro-Reflective Sheeting. Colors available are white, red, green, blue, black, brown, yellow and orange, as required by the buyer. Sizes available are ½”” x 50 yds. to 48" x 100 yds. Square or rectangular sheets available at no additional charge.

Type III High Intensity Grade Retro-Reflective Sheeting. Class 2 Pressure-Sensitive Adhesive, Non-Perforated or Perforated. Colors available are white, red, green, blue, brown, yellow and orange, as required by the buyer. Sizes available are ¾” x 50 yds. to 48" x 100 yds. Square or rectangular sheets are available at no additional charge.

Type III High Intensity Grade Retro-Reflective Orange/white Barricade Sheeting. Pressure Sensitive Adhesive, Left or Right, 4" or 6" diagonal strips in width as required by the buyer, from 8" x 50 yds to 48" x 100 yds.

Type IX Grade Retro-Reflective Sheeting, Pressure-Sensitive Adhesive, Non-Perforated. Colors available are white, red, green, blue, yellow, orange, fluorescent yellow, and fluorescent yellow-green, as required by the buyer. Sizes available are 3/4" x 50 yds to 48" x 100 yds. Square or rectangular sheets are available at no additional charge.

Slip Sheeting. Slip sheet paper, as recommended by the sheeting manufacturer, for surface protection during heat vacuum application or for use in packaging, storing or shipping. Slip sheet paper shall be supplied in rolls by the manufacturer.

Finished Sign Faces to be Used in the Manufacture of Standard Traffic Signs. All materials used to manufacture faces must have three (3) years NTPEP outdoor weathering. Pricing must be included on any equipment or parts of equipment that are listed.

Items designated as Type III shall be Intensity Grade Class 1 and 2 Retro-Reflective imagined sign faces. Sizes available from 8" to 48".

Items designated as Type IX shall be Grade Retro-Reflective imagined sign faces or Grade Fluorescent Yellow, Yellow-Green and Orange Retro-Reflective imagined sign faces, as indicated. Sizes available from 8" to 48".

Railroad Crossing Package. Item E645.61 shall include furnishing and delivering of two (2) "R's" 72" and (1) 16" x 42" material for "X." Item E645.62 shall include furnishing and delivering a five five gallon container of the Contact Cement needed for the Railroad Crossing Package (Item E645.61).

E645-5 BASIS OF PAYMENT

Payment shall be made under:

Item No.	Item	Pay Unit
E645.0201	Galvanized Sign Post Perforated - 12 GA, 1 1/4" x 1 1/4" x 12'	Each
E645.0202	Galvanized Sign Post Perforated - 12 GA, 1 1/2" x 1 1/2" x 12'	Each
E645.0203	Galvanized Sign Post Perforated - 12 GA, 1 3/4" x 1 3/4" x 9'	Each
E645.0204	Galvanized Sign Post Perforated - 12 GA, 1 3/4" x 1 3/4" x 10'	Each
E645.0205	Galvanized Sign Post Perforated - 12 GA, 1 3/4" x 1 3/4" x 11'	Each
E645.0206	Galvanized Sign Post Perforated - 12 GA, 1 3/4" x 1 3/4" x 12'	Each
E645.0207	Galvanized Sign Post Perforated - 12 GA, 2" x 2" x 12'	Each
E645.0208	Galvanized Sign Post Perforated - 12 GA, 2 1/4" x 2 1/4" x 12'	Each
E645.0209	Galvanized Sign Post Perforated - 12 GA, 28" Braces	Each
E645.0210	Galvanized Sign Post Perforated - 12 GA, 32" Braces	Each
E645.8108	Type A Sign Posts, Furnish and Deliver Only, 8 ft. long	Each
E645.8110	Type A Sign Posts, Furnish and Deliver Only, 10 ft. long	Each
E645.8105	Soil Plate for Type A Sign Post, Furnish and Deliver Only	Each
E645.4001	Type I Engineer Grade Retro-Reflective Sheeting – Pressure Sensitive, White	SF
E645.4002	Type I Engineer Grade Retro-Reflective Sheeting – Pressure Sensitive, Red	SF
E645.4003	Type I Engineer Grade Retro-Reflective Sheeting – Pressure Sensitive, Green	SF
E645.4004	Type I Engineer Grade Retro-Reflective Sheeting – Pressure Sensitive, Blue	SF
E645.4005	Type I Engineer Grade Retro-Reflective Sheeting – Pressure Sensitive, Black	SF
E645.4006	Type I Engineer Grade Retro-Reflective Sheeting – Pressure Sensitive, Brown	SF

Item No.	Item	Pay Unit
E645.4007	Type I Engineer Grade Retro-Reflective Sheeting – Pressure Sensitive, Yellow	SF
E645.4008	Type I Engineer Grade Retro-Reflective Sheeting – Pressure Sensitive, Orange	SF
E645.4101	Type I Engineer Grade Retro-Reflective Sheeting – Non-Perforated for Use in Electronic Plotters, White	SF
E645.4102	Type I Engineer Grade Retro-Reflective Sheeting – Non-Perforated for Use in Electronic Plotters, Red	SF
E645.4103	Type I Engineer Grade Retro-Reflective Sheeting – Non-Perforated for Use in Electronic Plotters, Green	SF
E645.4104	Type I Engineer Grade Retro-Reflective Sheeting – Non-Perforated for Use in Electronic Plotters, Blue	SF
E645.4105	Type I Engineer Grade Retro-Reflective Sheeting – Non-Perforated for Use in Electronic Plotters, Black	SF
E645.4106	Type I Engineer Grade Retro-Reflective Sheeting – Non-Perforated for Use in Electronic Plotters, Brown	SF
E645.4107	Type I Engineer Grade Retro-Reflective Sheeting – Non-Perforated for Use in Electronic Plotters, Yellow	SF
E645.4108	Type I Engineer Grade Retro-Reflective Sheeting – Non-Perforated for Use in Electronic Plotters, Orange	SF
E645.4201	Type I Engineer Grade Retro-Reflective Sheeting – Perforated for Use in Electronic Plotters, White	SF
E645.4202	Type I Engineer Grade Retro-Reflective Sheeting – Perforated for Use in Electronic Plotters, Red	SF
E645.4203	Type I Engineer Grade Retro-Reflective Sheeting – Perforated for Use in Electronic Plotters, Green	SF
E645.4204	Type I Engineer Grade Retro-Reflective Sheeting – Perforated for Use in Electronic Plotters, Blue	SF
E645.4205	Type I Engineer Grade Retro-Reflective Sheeting – Perforated for Use in Electronic Plotters, Black	SF
E645.4206	Type I Engineer Grade Retro-Reflective Sheeting – Perforated for Use in Electronic Plotters, Brown	SF
E645.4207	Type I Engineer Grade Retro-Reflective Sheeting – Perforated for Use in Electronic Plotters, Yellow	SF
E645.4208	Type I Engineer Grade Retro-Reflective Sheeting – Perforated for Use in Electronic Plotters, Orange	SF
E645.4301	Type III High Intensity Grade Retro-Reflective Sheeting, Pressure-Sensitive Adhesive, White	SF
E645.4302	Type III High Intensity Grade Retro-Reflective Sheeting, Pressure-Sensitive Adhesive, Red	SF
E645.4303	Type III High Intensity Grade Retro-Reflective Sheeting, Pressure-Sensitive Adhesive, Green	SF
E645.4304	Type III High Intensity Grade Retro-Reflective Sheeting, Pressure-Sensitive Adhesive, Blue	SF
E645.4305	Type III High Intensity Grade Retro-Reflective Sheeting, Pressure-Sensitive Adhesive, Brown	SF
E645.4306	Type III High Intensity Grade Retro-Reflective Sheeting, Pressure-Sensitive Adhesive, Yellow	SF
E645.4307	Type III High Intensity Grade Retro-Reflective Sheeting, Pressure-Sensitive Adhesive, Orange	SF

Item No.	Item	Pay Unit
E645.4401	Type III High Intensity Grade Retro-Reflective Sheeting, Perforated for Use in Electronic Plotter, White	SF
E645.4402	Type III High Intensity Grade Retro-Reflective Sheeting, Perforated for Use in Electronic Plotter, Red	SF
E645.4403	Type III High Intensity Grade Retro-Reflective Sheeting, Perforated for Use in Electronic Plotter, Green	SF
E645.4404	Type III High Intensity Grade Retro-Reflective Sheeting, Perforated for Use in Electronic Plotter, Blue	SF
E645.4405	Type III High Intensity Grade Retro-Reflective Sheeting, Perforated for Use in Electronic Plotter, Brown	SF
E645.4406	Type III High Intensity Grade Retro-Reflective Sheeting, Perforated for Use in Electronic Plotter, Yellow	SF
E645.4407	Type III High Intensity Grade Retro-Reflective Sheeting, Perforated for Use in Electronic Plotter, Orange	SF
E645.4501	Type III High Intensity Grade Retro-Reflective Orange/White Barricade Sheeting, Pressure-Sensitive Adhesive	SF
E645.4601	Type IX Grade Retro-Reflective Sheeting, Pressure-Sensitive Adhesive, White	SF
E645.4602	Type IX Grade Retro-Reflective Sheeting, Pressure-Sensitive Adhesive, Red	SF
E645.4603	Type IX Grade Retro-Reflective Sheeting, Pressure-Sensitive Adhesive, Green	SF
E645.4604	Type IX Grade Retro-Reflective Sheeting, Pressure-Sensitive Adhesive, Blue	SF
E645.4605	Type IX Grade Retro-Reflective Sheeting, Pressure-Sensitive Adhesive, Yellow	SF
E645.4606	Type IX Grade Retro-Reflective Sheeting, Pressure-Sensitive Adhesive, Orange	SF
E645.4607	Type IX Grade Retro-Reflective Sheeting, Pressure-Sensitive Adhesive, Fluorescent Yellow	SF
E645.4608	Type IX Grade Retro-Reflective Sheeting, Pressure-Sensitive Adhesive, Fluorescent Yellow-Green	SF
E645.4701	Slip Sheeting	SF
E645.4801	Overlay Films - Red	SF
E645.4802	Overlay Films - Blue	SF
E645.4803	Overlay Films - Green	SF
E645.4804	Overlay Films - Black	SF
E645.4805	Overlay Films - Brown	SF
E645.4806	Overlay Films - Thinner	SF
E645.5001	Type III One Color Screened Faces, 0-1 Sq. Ft.	SF
E645.5002	Type III One Color Screened Faces, 1-4 Sq. Ft.	SF
E645.5003	Type III One Color Screened Faces, 4+ Sq. Ft.	SF
E645.5101	Type III Two Color Screened Faces, 0-1 Sq. Ft.	SF
E645.5102	Type III Two Color Screened Faces, 1-4 Sq. Ft.	SF
E645.5103	Type III Two Color Screened Faces, 4+ Sq. Ft.	SF
E645.5201	Type III Three Color Screened Faces, 0-1 Sq. Ft.	SF
E645.5202	Type III Three Color Screened Faces, 1-4 Sq. Ft.	SF
E645.5203	Type III Three Color Screened Faces, 4+ Sq. Ft.	SF
E645.5301	Type IX One Color Screened Faces, 0-1 Sq. Ft.	SF
E645.5302	Type IX One Color Screened Faces, 1-4 Sq. Ft.	SF

Item No.	Item	Pay Unit
E645.5303	Type IX One Color Screened Faces, 4+ Sq. Ft.	SF
E645.5401	Type IX Two Color Screened Faces, 0-1 Sq. Ft.	SF
E645.5402	Type IX Two Color Screened Faces, 1-4 Sq. Ft.	SF
E645.5403	Type IX Two Color Screened Faces, 4+ Sq. Ft.	SF
E645.5501	Type IX Three Color Screened Faces, 0-1 Sq. Ft.	SF
E645.5502	Type IX Three Color Screened Faces, 1-4 Sq. Ft.	SF
E645.5503	Type IX Three Color Screened Faces, 4+ Sq. Ft.	SF
E645.5601	Type IX One Fluorescent Color Screened Faces 0-1 Sq. Ft.	SF
E645.5602	Type IX One Fluorescent Color Screened Faces 1-4 Sq. Ft.	SF
E645.5603	Type IX One Fluorescent Color Screened Faces 4+ Sq. Ft.	SF
E645.5701	Type IX Two Fluorescent Color Screened Faces 0-1 Sq. Ft.	SF
E645.5702	Type IX Two Fluorescent Color Screened Faces 1-4 Sq. Ft.	SF
E645.5703	Type IX Two Fluorescent Color Screened Faces 4+ Sq. Ft.	SF
E645.5801	Type IX Three Fluorescent Color Screened Faces 0-1 Sq. Ft.	SF
E645.5802	Type IX Three Fluorescent Color Screened Faces 1-4 Sq. Ft.	SF
E645.5803	Type IX Three Fluorescent Color Screened Faces 4+ Sq. Ft.	SF
E645.61	Railroad Crossing Package - Two "R's" 72" and one 16" x 42" Material for "X"	EA
E645.62	Five Gallon Container of Contact Cement for Railroad Crossing Package	EA

SECTION E646 – DELINEATORS, REFERENCE MARKERS AND SNOWPLOWING MARKERS

E646-1 DESCRIPTION. Section 646 of the NYSDOT Standard Specifications May 1, 2008 and all addenda shall apply except as modified herein.

Item E646.60 shall be Steel U channel, 1 pound per foot, baked enamel and 6 feet in length.

Item E646.70 shall be Steel U channel, 1 pound per foot, baked enamel and 8 feet in length.

E646-5 BASIS OF PAYMENT. The unit price bid shall include the cost of all materials and delivery only.

Payment shall be made under:

Item No.	**Item**	**Pay Unit**
E646.21	Reference Marker Panel	Each
E646.22	Delineator, Snowplowing Marker, Supplementary Snowplowing Marker Panels	Each
E646.31	Steel Post, 1.1 lb/ft	Each
E646.3101	Steel Post, 1.1 lb/ft, Lot of 100	Ea. Lot
E646.32	Steel Post, 2.0 lb/ft	Each
E646.3201	Steel Post, 2.0 lb/ft, Lot of 100	Ea. Lot
E646.60	*Steel U Channel, 6 feet in length*	*Each*
E646.6001	*Steel U Channel, 6 feet in length, Lot of 100*	*Ea. Lot*
E646.70	*Steel U Channel, 8 feet in length*	*Each*
E646.7001	*Steel U Channel, 8 feet in length, Lot of 100*	*Ea. Lot*

SECTION 648 – SUBSURFACE EXPLORATIONS

All requirements of the New York State Department of Transportation (NYSDOT) Standard Specifications dated May 1, 2008, with all updates, shall apply.

For Item 648.17 – Furninshing Equipment for Making Borings, assume that boring locations will be easily accessible.

Payment will be made under:

Item No.	Item	Pay Unit
648.01	Drill Hole, 2 ½ inch diameter 0 to 50 feet Depth Range	Foot
648.11	Split Barrel Sample	Each
648.12	Thin-walled Tube Sample	Each
648.17	Furnishing Equipment for Making Borings	Each
648.21	Grouting 2 ½ inch Bore Hole	Foot

SECTION E655 – FRAMES, GRATES AND COVERS

655-1 DESCRIPTION.

Cast Iron Frame and Grate. As per NYSDOT Standard Sheet M655-11 R1 or the latest revision, showing standard gratings.

Reticuline Type Grates and Frames. As shown on NYSDOT Standard Sheet No. M655-10R2 or the latest revision.

Parallel Bar Type Grates and Frames. As shown on NYSDOT Standard Sheet No. M655-8R2 or the latest revision.

Miscellaneous Castings. Various standard design casting of manholes, manhole covers, curb receivers, boxes and grating.

655-2 MATERIALS

Cast Iron Frame and Grate. Material to be MSHTO M105 Class 30B or Class 35B cast iron.

Cast Iron Manhole Paving (Adjusting) Rings. Material shall be AASHTO M105 Class 30B or Class 35B cast iron. Each ring shall incorporate three (3) set screws to secure ring to manhole frame.

655-3 CONSTRUCTION.

Cast Iron Frame and Grate. Unit must withstand HS-20 loading. Frames and covers shall have machined bearing surfaces. Covers shall have (4) equally spaced ¾" vent holes. Covers to be lettered ECSD SANITARY (or STORM -as specified) in 2" HIGH X *1/8"* deep letters.

No commercial "Brand Name" lettering will be allowed on the exposed surface cover.

Dimensions and design of standard frames and covers shall be in accordance with ERIE COUNTY Department of Environment & Planning Division of Sewerage Management Standard Detail #13 on page 118.

Dimensions and design of WaterTight frames and covers shall be in accordance with ERIE COUNTY Department of Environment & Planning Division of Sewerage Management Standard Detail #16 (see following pages).

655-4 METHOD OF MEASUREMENT.

Cast Iron Frame and Grate. Weights as listed on Standard Sheets will be used in making payments for grates and frames.

Reticuline Type Grates and Frames. Areas as listed on Standard Sheet No. M655-1 OR2 will be used in making payments for grates and frames.

Parallel Bar Type Grates and Frames. Weights as listed on Standard Sheet No. M655-8R2 will be used in making payment for Grates and Frames.

655-5 BASIS OF PAYMENT.

Cast Iron Frame and Grate. Price per lb. for F.O.B. any point in Erie County.

Reticuline Type Grates and Frames. Price per Sq. Ft. for F.O.B. any point in Erie County.

Parallel Bar Type Grates and Frames. Price per lb. for F.O.B. any point in Erie County.

Payment shall be made under:

Item No.	Item	Pay Unit
E655.0106	Cast Iron Frame and Grate, 6 in. Dia.	LB
E655.0108	Cast Iron Frame and Grate, 8 in. Dia.	LB
E655.0110	Cast Iron Frame and Grate, 10 in. Dia.	LB
E655.0112	Cast Iron Frame and Grate, 12 in. Dia.	LB
E655.0115	Cast Iron Frame and Grate, 15 in. Dia.	LB
E655.0118	Cast Iron Frame and Grate, 18 in. Dia.	LB
E655.0124	Cast Iron Frame and Grate, 24 in. Dia.	LB
E655.0130	Cast Iron Frame and Grate, 30 in. Dia.	LB
E655.0136	Cast Iron Frame and Grate, 36 in. Dia.	LB
E655.0201	Frames, Grates and Covers - Reticuline Type Grates and Frames	SF
E655.0501	Frames, Grates and Covers - Parallel Bar Type Grates and Frames	LB
E655.9901	Misc. Castings Weighing 100 lbs or less	LB
E655.9902	Misc. Castings Weighing 101 to 200 lbs	LB
E655.9903	Misc. Castings Weighing over 200 lbs	LB
E655.1001	Cast Iron Manhole Frames and Cover	Each
E655.1002	Cast Iron Manhole Frames and Cover	Each
E655.1003	Cast Iron Manhole Frames and Cover	Each
E655.1004	Cast Iron Manhole Frames and Cover	Each
E655.1005	Cast Iron Manhole Frames and Cover	Each
E655.1006	Cast Iron Manhole Frames and Cover	Each
E655.1007	Cast Iron Manhole Frames and Cover	Each
E655.1008	Cast Iron Manhole Frames and Cover	Each

STANDARD FRAME AND COVER

(DECEMBER 2013)

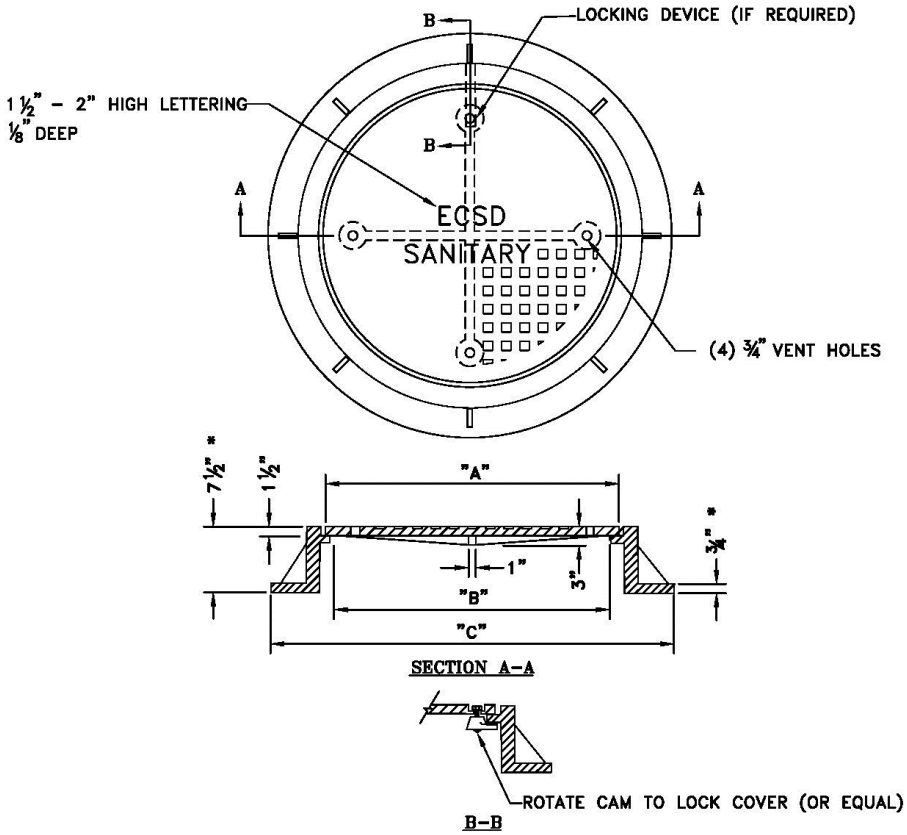

TABLE				
PIPE SIZE	DIMENSION "A"	DIMENSION "B"	DIMENSION "C"	WEIGHT OF COVER
8" THRU 18"	24"	22 1/4"	35"(MAX.)	150 LB. ± 5%
OVER 18"	32"	30"	46"(MAX.)	200 LB. ± 5%

STANDARD FRAME AND COVER NOTES

1. MATERIAL: ASTM A48 CLASS 30B CAST IRON CONFORMING TO AASHTO DESIGNATION M105–06.
2. UNIT MUST WITHSTAND H–20 WHEEL LOADING, AND CONFORM TO AASHTO DESIGNATION M306–10.
3. ALL DIMENSIONS ARE TO BE CONSIDERED MINIMUM WITH THE EXCEPTION OF THE COVER, WHICH MUST CONFORM EXACTLY TO MAINTAIN INTERCHANGEABILITY WITHIN THE COUNTY.
4. COATING NOT REQUIRED.
5. FRAMES AND COVERS SHALL HAVE MACHINED BEARING SURFACES.
6. LOCKING DEVICE MUST BE SITUATED TO ALLOW EASY REMOVAL OF COVER.
7. NO LETTERING OTHER THAN ECSD SANITARY WILL BE ALLOWED ON THE EXPOSED SURFACE OF THE COVER.
8. * 1/2" FLANGE THICKNESS AND 7" HEIGHT ACCEPTABLE IF CLASS 35 CAST IRON MATERIAL PROVIDED.

ERIE COUNTY
DEPT. OF ENVIRONMENT & PLANNING
DIVISION OF SEWERAGE MANAGEMENT

Rev. 1	4/9/96	REV'D PIPE SIZE TO OVER 18"
Rev. 2	12/9/96	REV'D <18" DIMENSIONS
Rev. 3	5/5/03	REV'D FRAME & LOCKS
Rev. 4	6/28/08	ADDED WEIGHTS TO TABLE
Rev. 5	12/26/13	REVISED NOTES 1 & 2 TO REFERENCE AASHTO STANDARDS AND ADDED NOTE 8

File: d–13 Date: 3/1/91

STD.DETAIL 13

WATER TIGHT FRAME AND COVER

(DECEMBER 2013)

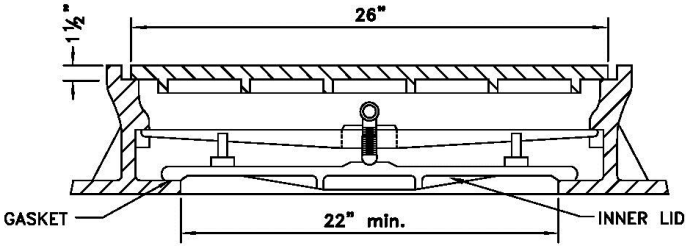

WATER TIGHT FRAME AND COVER NOTES

1. MATERIAL: ASTM A48 CLASS 30B CAST IRON CONFORMING TO AASHTO DESIGNATION M105–06.
2. UNIT MUST WITHSTAND H–20 WHEEL LOADING, AND CONFORM TO AASHTO DESIGNATION M306–10.
3. ALL DIMENSIONS ARE TO BE CONSIDERED MINIMUM WITH THE EXCEPTION OF THE COVER, WHICH MUST CONFORM EXACTLY TO MAINTAIN INTERCHANGEABILITY WITHIN THE COUNTY.
4. WATER TIGHT MANHOLE UNITS SHALL HAVE 4" STEEL VENT PIPE ASSEMBLY AS PER MANHOLE VENT DETAIL.
4. FRAMES AND COVERS SHALL HAVE MECHANICAL BEARING SURFACES.
6. COVERS SHALL BE SOLID WITH NON–PENETRATING PICKHOLES.
7. NO COMMERCIAL "BRAND NAME" LETTERING WILL BE ALLOWED ON THE EXPOSED SURFACE OF THE COVER.
8. COVER TO BEAR THE INSCRIPTION "ECSD SANITARY", EXCEPT FOR PRIVATE SYSTEMS.
9. THE FRAME SHALL BE PROVIDED WITH 6 HOLES ON FLANGE TO ACCEPT 1/2" ø ANCHOR BOLTS.

ERIE COUNTY DEPT. OF ENVIRONMENT & PLANNING DIVISION OF SEWERAGE MANAGEMENT	Rev. 1	2/7/94 ADDED NOTES 7 AND 8	STD.DETAIL 16
	Rev. 2	6/05 ADDED NOTE 9	
	Rev. 3	12/26/13 REVISED NOTES 1 & 2 TO REFERENCE AASHTO STANDARDS	
	File: d–16	Date: 3/1/91	

SECTION E680 – TRAFFIC SIGNALS

680-1 DESCRIPTION

General. This work shall consist of furnishing and installing new traffic signal equipment, in accordance with Section 680 of the NYS DOT Standard Specifications of May 1, 2008, and all addenda.

Portable Solar Power Traffic Signal (PSPTS). The requirements of NYSDOT Approved Product List dated September 2006 for this item will be followed with the following except:

680-2 MATERIALS:

Portable Solar Power Traffic Signal (PSPTS). The Portable Solar Power Traffic Signals will *have* to be delivered to any location in Erie County as requested. Delivery may be required on the same day.

The operation of the Portable Solar Power Traffic Signals shall be explained to the Senior Highway Maintenance Engineer, or General Crew Chief or Crew Chief. This training may also include law enforcement and or other highway personnel.

680-4 METHOD OF MEASUREMENT:

Portable Solar Power Traffic Signal (PSPTS). Payment for this item will be made on a calendar day, week or monthly basis for each PVMS supplied.

680-5 BASIS OF PAYMENT

Payment will be made under:

Item	Description	Pay Unit
E680.1301	Portable Solar Power Traffic Signals PSPTS Price per Set Rental (24 Hrs)	Per Day
E680.1302	Portable Solar Power Traffic Signals PSPTS Price per Set Rental (7 days)	Per Week
E680.1303	Portable Solar Power Traffic Signals PSPTS Price per Set Rental	Per Month
680.5001	Pole Excavation & Concrete Foundation	CY
680.5002	Concrete Base for Controller Cabinet	Each
E680.5050	Traffic Signals Remove Pole Foundation	Foot
680.510101	Pullbox - 15 inch, Reinforced Concrete	Each
680.510102	Pullbox - 15 inch, Opt. Reinforced Concrete/Bituminous Fiber	Each
680.510201	Pullbox - 18 inch, Reinforced Concrete	Each
680.510202	Pullbox - 18 inch, Opt. Reinforced Concrete/Bituminous Fiber	Each
680.510301	Pullbox - 24 inch, Reinforced Concrete	Each
680.510302	Pullbox - 24 inch, Opt. Reinforced Concrete/Bituminous Fiber	Each
680.510401	Pullbox - 30 inch, Reinforced Concrete	Each
680.510402	Pullbox - 30 inch, Opt. Reinforced Concrete/Bituminous Fiber	Each
680.510501	Pullbox - Rectangular 26x18 inch, Reinforced Concrete	Each
680.510502	Pullbox - Rectangular 26x18 inch, Opt. Reinforced Concrete/Bituminous Fiber	Each

SECTION E680 – TRAFFIC SIGNALS

Item	Description	Pay Unit
680.5120	Cast Iron Junction Box	Each
680.520106	Conduit, Steel, Zinc-coated, 2-inch	Foot
680.520108	Conduit, Steel, Zinc-coated, 3-inch	Foot
680.520506	Conduit, Rigid Plastic, Class 1, 2-inch	Foot
680.520508	Conduit, Rigid Plastic, Class 1, 3-inch	Foot
680.53	Conduit Jacking or Boring	Foot
680.53080305	Conduit, Flexible, Liquid Tight, Non-Metallic	Foot
680.54	Inductance Loop Installation	Foot
680.56	Emergency Pre-emption System	Each
680.600330	Traffic Signal Pole, Span Wire 3,000 lbs, 30 ft	Each
680.600540	Traffic Signal Pole, Span Wire 5,000 lbs, 40 ft	Each
680.610936	Traffic Signal Pole, Span Wire with Lighting Arm 9,000 lbs, 36 ft	Each
680.621640	Traffic Signal Pole--Mast Arm, 16' ht, 40' long	Each
680.631930	Traffic Signal Pole--Dual Mast Arm 19' m. ht., 30' long	Each
680.6710	Traffic Signal Pole--Post Top Mount 10 ft m. ht.	Each
680.7001	Single Span Wire Assembly	Each
680.7002	Dual Span Wire Assembly with Upper Tether Wire	Each
680.7003	Dual Span Wire Assembly with Lower Tether Wire	Each
680.7004	Messenger Assembly	Foot
680.7005	Guy Assembly	Each
680.700602	Riser Assembly 1/2 Inch Dia	Each
680.700603	Riser Assembly 1 Inch Dia	Each
680.700604	Riser Assembly 1 1/2 Inch Dia	Each
680.700606	Riser Assembly 2 Inch Dia	Each
680.700607	Riser Assembly 2 1/2 Inch Dia	Each
680.700608	Riser Assembly 3 Inch Dia	Each
680.700609	Riser Assembly 3 1/2 Inch Dia	Each
680.700610	Riser Assembly 4 Inch Dia	Each
680.700612	Riser Assembly 5 Inch Dia	Each
680.700613	Riser Assembly 6 Inch Dia	Each
680.71	Shielded Lead-in Cable	Foot
680.72	Inductance Loop Wire	Foot
680.730314	Signal Cable 3 Conductors, 14 AWG	Foot
680.730314	Signal Cable 5 Conductors, 14 AWG	Foot
680.750619	Shielded Communication Cable, 6 Pairs, 19 AWG	Foot
E680.7900	Traffic Signals Remove Traffic Signal Installation	Each
E680.8031	Traffic Signals Furnish & Install Micro Computer & Cabinet	Each
680.810101	Traffic Signal Module - 12 inch Red Ball, LED	Each
680.810102	Traffic Signal Module - 12 inch Red Arrow, LED	Each
680.810103	Traffic Signal Module - 12 inch Yellow Ball, LED	Each
680.810104	Traffic Signal Module - 12 inch Yellow Arrow, LED	Each
680.810105	Traffic Signal Module - 12 inch Green Ball, LED	Each
680.810106	Traffic Signal Module - 12 inch Green Arrow, LED	Each
680.810107	Traffic Signal Module - 12 inch, Traffic signal Section-Type 1, 12 inch	Each
680.810108	Traffic Signal Module - 12 inch, Bi-Modal, Yellow/Green Arrows LED	Each

SECTION E680 – TRAFFIC SIGNALS

Item	Description	Pay Unit
680.8102	Traffic Signal Module - 12 inch, Traffic Signal Section Optically Programmed	Each
680.810301	Traffic Signal Module - 8 inch Red Ball, LED	Each
680.810302	Traffic Signal Module - 8 inch Red Arrow, LED	Each
680.810303	Traffic Signal Module - 8 inch Yellow Ball, LED	Each
680.810304	Traffic Signal Module - 8 inch Yellow Arrow, LED	Each
680.810305	Traffic Signal Module - 8 inch Green Ball, LED	Each
680.810306	Traffic Signal Module - 8 inch Green Arrow, LED	Each
680.810307	Traffic Signal Section - Type I, 8 inch	Each
680.810308	Install Ball/Arrow LED Traffic Signal Module	Each
680.810601	Traffic Signal Section Polycarbonate Type I, 12 inch	Each
680.810701	Traffic Signal Section Polycarbonate Type I, 8 inch	Each
680.8111	Traffic Signal Bracket Assembly 1 Way	Each
680.8112	Traffic Signal Bracket Assembly 2 Way	Each
680.8113	Traffic Signal Bracket Assembly 3 Way	Each
680.8114	Traffic Signal Bracket Assembly 4 Way	Each
680.8115	Traffic Signal Bracket Assembly 5 Way	Each
680.8120	Traffic Signal Disconnect Hanger	Each
680.813101	Pedestrian Signal Module-12 inch Hand Symbol LED	Each
680.813102	Pedestrian Signal Module - 12" x 12" MAN Symbol LED	Each
680.813103	Pedestrian Signal Section - Type I, 12 inch	Each
680.813104	Install LED Pedestrian Signal Module	Each
680.813105	Pedestrian Signal Module-12 inch Bi-Modal Hand/Man Symbol LED	Each
680.813106	Pedestrian Signal Section-Polycarbonate Type I, 12 inch	Each
680.813107	Pedestrian Signal Module - 16"x18" Bi-Modal Hand/Man Symbol LED	Each
680.813108	Pedestrian Signal Section, Type I for 12"x18" LED Module	Each
680.813109	Pedestrian Signal Section, Polycarbonate, Type I for 16"x18" LED Module	Each
680.8141	Pedestrian Bracket Mount Assembly	Each
680.8142	Pedestrian Signal Post Top Mount Assembly	Each
E680.8150	Pedestrian Countdown Timer Module	Each
680.8201	Overhead Sign Assembly, Type A	Each
680.8202	Overhead Sign Assembly, Type B	Each
680.8220	Flashing Beacon Sign Assembly	Each
680.8225	Pedestrian Push Button & Sign without Post	Each
680.8226	Pedestrian Push Button & Sign-with Post	Each
680.8230	Fire Pre-Emption Tell Tale Light	Each
E680.94	Raintight Disconnect Box	Each
E680.949970	Furnish & Install Electrical Disconnect/Generator Transfer Switch	Each
E680.9502	Service Cable 2 Conductor	Foot
E680.9510	Furnish & Install Power Feed System	Each

SECTION E685 – EPOXY REFLECTORIZED PAVEMENT MARKINGS

All requirements of the New York State Department of Transportation (NYSDOT) Standard Specifications dated May 1, 2008, with all updates, shall apply.

Payment will be made under:

Item No.	Item	Pay Unit
E685.1101	White Epoxy Reflectorized Pavement Stripes - 20 mils (0 feet to 5,000 feet)	Feet
E685.1102	White Epoxy Reflectorized Pavement Stripes - 20 mils (5,000 feet to 10,000 feet)	Feet
E685.1103	White Epoxy Reflectorized Pavement Stripes - 20 mils (Over 10,000 feet)	Feet
E685.1201	Yellow Epoxy Reflectorized Pavement Stripes - 20 mils (0 feet to 5,000 feet)	Feet
E685.1202	Yellow Epoxy Reflectorized Pavement Stripes - 20 mils (5,000 feet to 10,000 feet)	Feet
E685.1203	Yellow Epoxy Reflectorized Pavement Stripes - 20 mils (Over 10,000 feet)	Feet
685.13	White Epoxy Reflectorized Pavement Letters - 20 mils	Each
685.14	White Epoxy Reflectorized Pavement Symbols - 20 mils	Each

SECTION E701 - HYDRAULIC CEMENTS

All hydraulic cements shall meet the requirements of the New York State Department of Transportation (NYSDOT) Materials Bureau.

The materials listed below shall meet the requirements of listed Section of the NYSDOT Standard Specifications May 1, 2008, with all updates to date.

Portland Cement, Type I or II	701-01
Masonry Cement	701-02
Concrete Repair Material	701-12

Unit bid prices shall include all costs to transport the materials to the directed location.

Payment will be made under:

Item No.	**Item**	**Pay Unit**
E701.01	Portland Cement, Type I or II, 94-lb bag	Each
E701.02	Masonry Cement, Type M, 75-lb bag	Each
E701.03	Masonry Cement, Type S, 75-lb bag	Each
E701.04	Concrete Repair Material, Quikrete Crack Resistant or Equal, 80-lb bag	Each
E701.05	Pre-packed Mortar, 80-lb bag	Each

SECTION E703 – AGGREGATES

All aggregates shall meet the requirements of the New York State Department of Transportation (NYSDOT) Materials Bureau. A New York State Department of Environmental Conservation (NYSDEC) Mine and Land reclamation permit number and a NYSDOT Source Number must be provided to the Owner prior to Contractor's acceptance of the Owner's purchase order. If vendor does not have a source number, sampling and testing documentation/verification that material meets or exceeds NYSDOT specifications must be provided to the Owner prior to Contractor's acceptance of the Owner's purchase order.

The materials listed below shall meet the requirements of listed Section of the NYSDOT Standard Specifications May 1, 2008, with all updates to date.

Crushed Stone	703-0201
Crushed Gravel	703-0202
Screened Gravel	703-0203
Mortar Sand	703-03
Concrete Sand	703-07
Underdrain Filter	733-20
Subbase Course	733-04
Recycled Portland Cement Concrete	733-07
Reclaimed Asphalt Pavement for Earthwork and Subbase	733-06

Unit bid prices shall include all costs to transport the materials to the directed location.

Payment will be made under:

Item No.	Item	Pay Unit
E703.01	Crushed Stone, Screenings (Table 703-04)	Ton
E703.02	Crushed Stone, Type 1 (Table 405-1)	Ton
E703.03	Crushed Stone, Type 2 (Table 405-1)	Ton
E703.04	Crushed Stone, Type 3 (Table 405-1)	Ton
E703.05	Crushed Stone, #1 (Table 703-04)	Ton
E703.06	Crushed Stone, #1A (Table 703-04)	Ton
E703.07	Crushed Stone, #1ST (Table 703-04)	Ton
E703.08	Crushed Stone, #2 (Table 703-04)	Ton
E703.09	Crushed Stone, #1 & #2 Mixed (Table 703-04)	Ton
E703.10	Crushed Stone, #3 or #4A Mixed (Table 703-04)	Ton
E703.11	Crushed Stone, #4 or #3 & #4 Mixed (Table 703-04)	Ton
E703.12	Crushed Stone, 3/8-inch Oiling Stone	Ton
E703.13	Crushed Stone, 1" Crusher Run	Ton
E703.14	Crushed Stone, 2" Crusher Run (Subbase Type 2) (Table 733-04A)	Ton
E703.15	Crushed Stone, 3" Crusher Run (Subbase Type 1) (Table 733-04A)	Ton
E703.16	Crushed Stone, 4" Crusher Run (Subbase Type 3) (Table 733-04A)	Ton
E703.17	Crushed Stone Fill, Fine (Table 733-21A)	Ton
E703.18	Crushed Stone Fill, Light (Table 733-21A)	Ton
E703.19	Crushed Stone Fill, Medium (Table 733-21A)	Ton
E703.20	Crushed Stone Fill, Heavy (Table 733-21A)	Ton
E703.21	Crushed Stone, Dry Rip Rap	Ton
E703.22	Crushed Gravel, Type 1 (Table 405-1)	Ton
E703.23	Crushed Gravel, Type 2 (Table 405-1)	Ton
E703.24	Crushed Gravel, #1 (Table 703-04)	Ton
E703.25	Crushed Gravel, #1A (Table 703-04)	Ton

SECTION E703 – AGGREGATES

Item No.	Item	Pay Unit
E703.26	Crushed Gravel, #1ST (Table 703-04)	Ton
E703.27	Crushed Gravel, #2 (Table 703-04)	Ton
E703.28	Crushed Gravel, #1 & #2 Mixed (Table 703-04)	Ton
E703.29	Crushed Gravel, Bank Run	Ton
E703.30	Crushed Gravel, 1” Crusher Run	Ton
E703.31	Crushed Gravel, 2” Crusher Run (Subbase Type 2) (Table 733-04A)	Ton
E703.32	Crushed Gravel, 3” Crusher Run (Subbase Type 1) (Table 733-04A)	Ton
E703.33	Screened Gravel, Type 1 (Table 405-1)	Ton
E703.34	Screened Gravel, Type 2 (Table 405-1)	Ton
E703.35	Screened Gravel, Type 3 (Table 405-1)	Ton
E703.36	Screened Gravel, #1 (Table 703-04)	Ton
E703.37	Screened Gravel, #1A (Table 703-04)	Ton
E703.38	Screened Gravel, #1ST (Table 703-04)	Ton
E703.39	Screened Gravel, #2 (Table 703-04)	Ton
E703.40	Screened Gravel, #1 & #2 Mixed (Table 703-04)	Ton
E703.41	Screened Gravel, Bank Run	Ton
E703.42	Screened Gravel, 1” Crusher Run	Ton
E703.43	Screened Gravel, 2” Crusher Run (Subbase Type 2) (Table 733-04A)	Ton
E703.44	Screened Gravel, 3” Crusher Run (Subbase Type 1) (Table 733-04A)	Ton
E703.50	Mortar Sand	Ton
E703.51	Concrete Sand	Ton
E703.52	Recycled Concrete Aggregate, 1-inch	Ton
E703.53	Recycled Concrete Aggregate, 2-inch	Ton
E703.54	Sidewalk Blend (60-40 blend of #1 and Concrete Sand)	Ton
E703.55	Reclaimed Asphalt Pavement for Earthwork and Subbase	Ton

SECTION E704 – MASONRY MATERIALS

E704-1DESCRIPTION

This specification covers the material and quality requirements for solid concrete manhole blocks for use in the construction of drainage structures.

E704-2MATERIALS

Materials shall meet the requirements specified in the following subsections of Section 700:

Precast Concrete Pavers	704-13
Mortar for Concrete Masonry	705-21

If radial, they must be made in true segments of a circle with the inside and outside surfaces curved to the desired radius. The units used in the cone section of the manhole shall be drawn in (reduced) 6 inches for every 8 inches in height. The unit shall be so designed and laid that the interior surfaces of manholes are cylindrical for the straight sides and conical for at least the top four courses with no offsets.

Corner units for square or rectangular basins or inlets must be "L" shaped with an inside return side not less than one quarter nor more than one half the length of the normal unit.

Units for both manholes and basins shall be so designed that only full length units are required to lay anyone course. Inside and outside joints shall not exceed one-half inch.

Concrete mix proportions shall be such that the minimum compressive strength as determined on the units themselves shall be as stated in this specification.

The transportation and placement of concrete shall be done by methods that will prevent segregation of the concrete materials.

The use of high early strength cement, calcium chloride, or any other concrete additive not expressly approved is prohibited.

Blocks shall be sound and free from cracks or other defects that would interfere with the proper placing of the block.

All blocks shall be subjected to curing by anyone of the methods described in the subsection entitled "Curing" 706-02, Reinforced Concrete Pipe. Curing shall be accomplished to the satisfaction of the County. Units shall be protected from freezing from the time the concrete is placed and until curing is completed.

E704-3TEST

The minimum average compressive strength of concrete block samples representing any lot, as determined upon the units themselves, shall be 2500 pounds per square inch of cross sectional area of the unit as laid in the structure.

The compressive strength of any individual unit shall not be less than 2000 pounds per square inch The maximum average absorption of concrete block samples representing any lot shall not exceed eight percent (8%) by weight. The absorption of any individual unit-shall not exceed ten percent (10%) by weight.

All test procedures shall be conducted in accordance with ASTM C140.

E704-4BASIS OF ACCEPTANCE

The material will be considered for acceptance in accordance with procedural directives of the County for either stock lot quantities at the manufacturing location, or on the basis of job sampling in the event samples are not taken at the plant.

E704-5BASIS OF PAYMENT

Payment will be made under:

Item No.	Item	Pay Unit
E704.01	Solid Concrete Block, 8” x 8” x 16”	Each
E704.02	Solid Concrete Block, 4” x 8” x 16”	Each
E704.03	Hollow Concrete Block, 8” x 8” x 16”	Each
E704.04	Hollow Concrete Block, 4” x 8” x 16”	Each
E704.05	Standard Concrete Brick	Each
E704.1101	Delivery Charge, 1 Pallet to Aurora District	Lump Sum
E704.1124	Delivery Charge, 2-4 Pallets to Aurora District	Lump Sum
E704.1159	Delivery Charge, 5 or More Pallets to Aurora District	Lump Sum
E704.1201	Delivery Charge, 1 Pallet to Clarence District	Lump Sum
E704.1224	Delivery Charge, 2-4 Pallets to Clarence District	Lump Sum
E704.1259	Delivery Charge, 5 or More Pallets to Clarence District	Lump Sum
E704.1301	Delivery Charge, 1 Pallet to East Concord District	Lump Sum
E704.1324	Delivery Charge, 2-4 Pallets to East Concord District	Lump Sum
E704.1359	Delivery Charge, 5 or More Pallets to East Concord District	Lump Sum
E704.1401	Delivery Charge, 1 Pallet to Hamburg District	Lump Sum
E704.1424	Delivery Charge, 2-4 Pallets to Hamburg District	Lump Sum
E704.1459	Delivery Charge, 5 or More Pallets to Hamburg District	Lump Sum
E704.1501	Delivery Charge, 1 Pallet to Harlem District	Lump Sum
E704.1524	Delivery Charge, 2-4 Pallets to Harlem District	Lump Sum
E704.1559	Delivery Charge, 5 or More Pallets to Harlem District	Lump Sum

SECTION E800 – MATERIALS DELIVERY

DELIVERY ON ALL BITUMINOUS MIXES
DELIVERY ON ALL STONE, GRAVEL, OR SLAG ITEMS

The mileage to be allowed from plant to destination is the actual minimum mileage between the two points over properly conditioned roads, as determined by the County.

Mileage delivery cost per ton in County trucks from plant to destination will be figured on the following basis:

$0.30 each mile for the first five (5) miles
plus (+)
$0.25 each additional mile six to fifteen (6 -15) miles
plus (+)
$0.20 each additional mile over fifteen to fifty (15 -50) miles

This cost shall be added to bid price for material to determine bid award.

For estimating purposes only, trucks rented by the County for hauling materials under this contract shall be considered as County-owned trucks.

It will be assumed that bidder's transportation rates indicated in the Invitation for Bids are to be calculated in the same manner unless different method of calculation is explained.

E800-1.01 All Bituminous Materials or Aggregate Delivered to a Paver or Widener:

Hauling from Plant Gate or Pit to Job Site.

Item No.	Item	Pay Unit
E800.0101	Bituminous Materials or Aggregate Delivered to Paver or Widener, 0-5 Miles Fixed Charge Price	Ton
E800.0102	Bituminous Materials or Aggregate Delivered to Paver or Widener, 6-15 Miles Price per Ton per Mile	Ton/Mile
E800.0103	Bituminous Materials or Aggregate Delivered to Paver or Widener, Price per Ton per Mile for over 15 Miles	Ton/Mile

E800-1.02 All Asphalt, Stone, Gravel or Slag Delivered to a Stockpile or Plant:

Hauling from Plant Gate or Pit to Job Site.

Item No.	Item	Pay Unit
E800.0201	Asphalt, Stone, Gravel or Slag Delivered to Stockpile or Plant, 0-5 Miles Fixed Charge Price	Ton
E800.0202	Asphalt, Stone, Gravel or Slag Delivered to Stockpile or Plant, 6-15 Miles Price per Ton per Mile	Ton/Mile
E800.0203	Asphalt, Stone, Gravel or Slag Delivered to Stockpile or Plant, Price per Ton per Mile for over 15 Miles	Ton/Mile

SECTION E900 – RENTAL EQUIPMENT

900-1 Description:

Provide the equipment enumerated on an as needed basis. Equipment shall be a recent model in good repair and operating condition and shall be fully insured. The price bid shall include delivery to and from any single jobsite in Erie County. A day is eight (8) hours, a week is forty (40) hours and a month is one hundred seventy six (176) hours. Overtime for operators (employees) shall be computed at time and one half over 8 hours. Overtime for machine shall be computed as straight time (one eighth of the daily rate, one fortieth of the weekly rate, etc.) for each hour over 8 hours.

900-1.01 Road Widener with Operator:

The widener shall be of a Blaw Knox Model #195 or equal.

Item No.	Item	Pay Unit
E900.01PD	Road Widener with Operator (per Day)	Day
E900.01PW	Road Widener with Operator (per Week)	Week
E900.01PM	Road Widener with Operator (per Month)	Month

900-1.02 Bituminous Asphalt Paver with Operator:

The paver shall be a minimum of 19 feet paving width (Barber Green 240 or Cat AP1000 or equal) equipped with automatic transverse slope and longitudinal grade screed controls.

Item No.	Item	Pay Unit
E900.02PD	Bituminous Asphalt Paver with Operator (per Day)	Day
E900.02PW	Bituminous Asphalt Paver with Operator (per Week)	Week
E900.02PM	Bituminous Asphalt Paver with Operator (per Month)	Month

900-1.03 Bituminous Asphalt Paver with Operator and Screed Man:

The paver shall be a minimum of 19 feet paving width (Barber Green 240 or Cat AP1000 or equal) equipped with automatic transverse slope and longitudinal grade screed controls.

Item No.	Item	Pay Unit
E900.03PD	Bitum. Asphalt Paver with Operator and Screed Man (per Day)	Day
E900.03PW	Bitum. Asphalt Paver with Operator and Screed Man (per Week)	Week
E900.03PM	Bitum. Asphalt Paver with Operator and Screed Man (per Month)	Month

900-1.04 Self-Propelled 4-Speed Loader with Operator:

The loader shall be a minimum twenty-five (25’) foot conveyor model 7-11 Vathey type loader or equal.

Item No.	Item	Pay Unit
E900.04PD	Self-Propelled 4-Speed Loader with Operator (per Day)	Day
E900.04PW	Self-Propelled 4-Speed Loader with Operator (per Week)	Week
E900.04PM	Self-Propelled 4-Speed Loader with Operator (per Month)	Month

900-1.05 Portable Screening Plant without Operator:

Portable Screening Plant to be Finlay 312 or equal with portable fifty (50') foot Stacking Conveyor to be Finlay 524 or equal. Unit to be sized to screen RAP at approximately *1-1/2",* at approximately 80 T.P.H.

Item No.	Item	Pay Unit
E900.05PD	Portable Screening Plant without Operator (per Day)	Day
E900.05PW	Portable Screening Plant without Operator (per Week)	Week
E900.05PM	Portable Screening Plant without Operator (per Month)	Month

900-1.06 Portable Screening plant with Operator:

Portable Screening Plant to be Finlay 312 or equal with portable fifty (50') foot Stacking Conveyor to be Finlay 524 or equal. Unit to be sized to screen RAP at approximately *1-1/2",* at approximately 80 T.P.H.

Item No.	Item	Pay Unit
E900.06PD	Portable Screening Plant with Operator (per Day)	Day
E900.06PW	Portable Screening Plant with Operator (per Week)	Week
E900.06PM	Portable Screening Plant with Operator (per Month)	Month

900-1.07 2-Ton Roller without Operator:

The roller shall be a minimum sixty (60") inch dual drum articulated vibratory asphalt compactor.

Item No.	Item	Pay Unit
E900.07PD	2-Ton Roller without Operator (per Day)	Day
E900.07PW	2-Ton Roller without Operator (per Week)	Week
E900.07PM	2-Ton Roller without Operator (per Month)	Month

900-1.08 2-Ton Roller with Operator:

The roller shall be a minimum sixty (60") inch dual drum articulated vibratory asphalt compactor.

Item No.	Item	Pay Unit
E900.08PD	2-Ton Roller with Operator (per Day)	Day
E900.08PW	2-Ton Roller with Operator (per Week)	Week
E900.08PM	2-Ton Roller with Operator (per Month)	Month

900-1.09 3-5-Ton Roller without Operator:

The roller shall be a minimum sixty (60") inch dual drum articulated vibratory asphalt compactor.

Item No.	Item	Pay Unit
E900.09PD	3-5-Ton Roller without Operator (per Day)	Day
E900.09PW	3-5-Ton Roller without Operator (per Week)	Week
E900.09PM	3-5-Ton Roller without Operator (per Month)	Month

900-1.10 3-5-Ton Roller with Operator:

The roller shall be a minimum sixty (60") inch dual drum articulated vibratory asphalt compactor.

Item No.	Item	Pay Unit
E900.10PD	3-5-Ton Roller with Operator (per Day)	Day
E900.10PW	3-5-Ton Roller with Operator (per Week)	Week
E900.10PM	3-5-Ton Roller with Operator (per Month)	Month

900-1.11 10-Ton Roller without Operator:

The roller shall be a minimum seventy-two (72") inch dual drum articulated vibratory asphalt compactor.

Item No.	Item	Pay Unit
E900.11PD	10-Ton Roller without Operator (per Day)	Day
E900.11PW	10-Ton Roller without Operator (per Week)	Week
E900.11PM	10-Ton Roller without Operator (per Month)	Month

900-1.12 10-Ton Roller with Operator:

The roller shall be a minimum seventy-two (72") inch dual drum articulated vibratory asphalt compactor.

Item No.	Item	Pay Unit
E900.12PD	10-Ton Roller with Operator (per Day)	Day
E900.12PW	10-Ton Roller with Operator (per Week)	Week
E900.12PM	10-Ton Roller with Operator (per Month)	Month

900-1.13 Pneumatic Tired Roller without Operator:

The pneumatic tired roller shall have a maximum wheel load of five thousand six hundred (5,600 Ibs) pounds, tire compression on pavement of 80 ± 5 P.S.I. and a maximum axle load of twenty-two thousand four hundred (22,400 Ibs.) pounds.

Item No.	Item	Pay Unit
E900.13PD	Pneumatic Tired Roller without Operator (per Day)	Day
E900.13PW	Pneumatic Tired Roller without Operator (per Week)	Week

900-1.14 Pneumatic Tired Roller with Operator:

The pneumatic tired roller shall have a maximum wheel load of five thousand six hundred (5,600 Ibs) pounds, tire compression on pavement of 80 ± 5 P.S.I. and a maximum axle load of twenty-two thousand four hundred (22,400 Ibs.) pounds.

Item No.	Item	Pay Unit
E900.14PD	Pneumatic Tired Roller with Operator (per Day)	Day
E900.14PW	Pneumatic Tired Roller with Operator (per Week)	Week

900-1.15 6-Ton Excavator Crawler without Operator:

Item No.	Item	Pay Unit
E900.15PD	6-Ton Excavator Crawler without Operator (per Day)	Day
E900.15PW	6-Ton Excavator Crawler without Operator (per Week)	Week
E900.15PM	6-Ton Excavator Crawler without Operator (per Month)	Month

900-1.16 6-Ton Excavator Crawler with Operator:

Item No.	Item	Pay Unit
E900.16PD	6-Ton Excavator Crawler with Operator (per Day)	Day
E900.16PW	6-Ton Excavator Crawler with Operator (per Week)	Week
E900.16PM	6-Ton Excavator Crawler with Operator (per Month)	Month

900-1.17 12-Ton Excavator Crawler without Operator:

Item No.	Item	Pay Unit
E900.17PD	12-Ton Excavator Crawler without Operator (per Day)	Day
E900.17PW	12-Ton Excavator Crawler without Operator (per Week)	Week
E900.17PM	12-Ton Excavator Crawler without Operator (per Month)	Month

900-1.18 12-Ton Excavator Crawler with Operator:

Item No.	Item	Pay Unit
E900.18PD	12-Ton Excavator Crawler with Operator (per Day)	Day
E900.18PW	12-Ton Excavator Crawler with Operator (per Week)	Week
E900.18PM	12-Ton Excavator Crawler with Operator (per Month)	Month

900-1.19 15-Ton Excavator Crawler without Operator:

Item No.	Item	Pay Unit
E900.19PD	15-Ton Excavator Crawler without Operator (per Day)	Day
E900.19PW	15-Ton Excavator Crawler without Operator (per Week)	Week
E900.19PM	15-Ton Excavator Crawler without Operator (per Month)	Month

900-1.20 15-Ton Excavator Crawler with Operator:

Item No.	Item	Pay Unit
E900.20PD	15-Ton Excavator Crawler with Operator (per Day)	Day
E900.20PW	15-Ton Excavator Crawler with Operator (per Week)	Week
E900.20PM	15-Ton Excavator Crawler with Operator (per Month)	Month

900-1.21 22-Ton Excavator Crawler without Operator:

Item No.	Item	Pay Unit
E900.21PD	22-Ton Excavator Crawler without Operator (per Day)	Day
E900.21PW	22-Ton Excavator Crawler without Operator (per Week)	Week
E900.21PM	22-Ton Excavator Crawler without Operator (per Month)	Month

900-1.22 22-Ton Excavator Crawler with Operator:

Item No.	Item	Pay Unit
E900.22PD	22-Ton Excavator Crawler with Operator (per Day)	Day
E900.22PW	22-Ton Excavator Crawler with Operator (per Week)	Week
E900.22PM	22-Ton Excavator Crawler with Operator (per Month)	Month

900-1.23 15-Ton Excavator Rubber Tire with Telescope Boom without Operator:

Item No.	Item	Pay Unit
E900.23PD	15-Ton Exc. Rubber Tire w. Telescope Boom w/o Op. (per Day)	Day
E900.23PW	15-Ton Exc. Rubber Tire w. Telescope Boom w/o Op. (per Week)	Week
E900.23PM	15-Ton Exc. Rubber Tire w. Telescope Boom w/o Op. (per Month)	Month

900-1.24 15-Ton Excavator Rubber Tire with Telescope Boom with Operator:

Item No.	Item	Pay Unit
E900.24PD	15-Ton Exc. Rubber Tire w. Telescope Boom with Op. (per Day)	Day
E900.24PW	15-Ton Exc. Rubber Tire w. Telescope Boom with Op. (per Week)	Week
E900.24PM	15-Ton Exc. Rubber Tire w. Telescope Boom with Op. (per Month)	Month

900-1.25 15-Ton Excavator Rubber Tire with Telescope Boom without Operator:

Item No.	Item	Pay Unit
E900.25PD	18-Ton Exc. Rubber Tire w. Telescope Boom w/o Op. (per Day)	Day
E900.25PW	18-Ton Exc. Rubber Tire w. Telescope Boom w/o Op. (per Week)	Week
E900.25PM	18-Ton Exc. Rubber Tire w. Telescope Boom w/o Op. (per Month)	Month

900-1.26 15-Ton Excavator Rubber Tire with Telescope Boom with Operator:

Item No.	Item	Pay Unit
E900.26PD	18-Ton Exc. Rubber Tire w. Telescope Boom with Op. (per Day)	Day
E900.26PW	18-Ton Exc. Rubber Tire w. Telescope Boom with Op. (per Week)	Week
E900.26PM	18-Ton Exc. Rubber Tire w. Telescope Boom with Op. (per Month)	Month

900-1.27 21-Ton Excavator Rubber Tire with Telescope Boom without Operator:

Item No.	Item	Pay Unit
E900.27PD	21-Ton Exc. Rubber Tire w. Telescope Boom w/o Op. (per Day)	Day
E900.27PW	21-Ton Exc. Rubber Tire w. Telescope Boom w/o Op. (per Week)	Week
E900.27PM	21-Ton Exc. Rubber Tire w. Telescope Boom w/o Op. (per Month)	Month

900-1.28 21-Ton Excavator Rubber Tire with Telescope Boom with Operator:

Item No.	Item	Pay Unit
E900.28PD	21-Ton Exc. Rubber Tire w. Telescope Boom with Op. (per Day)	Day
E900.28PW	21-Ton Exc. Rubber Tire w. Telescope Boom with Op. (per Week)	Week
E900.28PM	21-Ton Exc. Rubber Tire w. Telescope Boom with Op. (per Month)	Month

900-1.29 Wheel Loader, Rubber Tire, 2-Yard Unit without Operator:

Item No.	Item	Pay Unit
E900.29PD	Wheel Loader, Rubber Tire, 2-Yard Unit w/o Operator (per Day)	Day
E900.29PW	Wheel Loader, Rubber Tire, 2-Yard Unit w/o Operator (per Week)	Week
E900.29PM	Wheel Loader, Rubber Tire, 2-Yard Unit w/o Operator (per Month)	Month

900-1.30 Wheel Loader, Rubber Tire, 2-Yard Unit with Operator:

Item No.	Item	Pay Unit
E900.30PD	Wheel Loader, Rubber Tire, 2-Yard Unit with Operator (per Day)	Day
E900.30PW	Wheel Loader, Rubber Tire, 2-Yard Unit with Operator (per Week)	Week
E900.30PM	Wheel Loader, Rubber Tire, 2-Yard Unit with Operator (per Month)	Month

900-1.31 Wheel Loader, Rubber Tire, 2 ½-Yard Unit without Operator:

Item No.	Item	Pay Unit
E900.31PD	Wheel Loader, Rubber Tire, 2 ½-Yard Unit w/o Operator (per Day)	Day
E900.31PW	Wheel Loader, Rubber Tire, 2 ½-Yard Unit w/o Operator (per Week)	Week
E900.31PM	Wheel Loader, Rubber Tire, 2 ½-Yard Unit w/o Operator (per Month)	Month

900-1.32 Wheel Loader, Rubber Tire, 2 ½-Yard Unit with Operator:

Item No.	Item	Pay Unit
E900.32PD	Wheel Loader, Rubber Tire, 2 ½-Yard Unit with Operator (per Day)	Day
E900.32PW	Wheel Loader, Rubber Tire, 2 ½-Yard Unit with Operator (per Week)	Week
E900.32PM	Wheel Loader, Rubber Tire, 2 ½-Yard Unit with Operator (per Month)	Month

900-1.33 Wheel Loader, Rubber Tire, 3-Yard Unit without Operator:

Item No.	Item	Pay Unit
E900.33PD	Wheel Loader, Rubber Tire, 3-Yard Unit w/o Operator (per Day)	Day
E900.33PW	Wheel Loader, Rubber Tire, 3-Yard Unit w/o Operator (per Week)	Week
E900.33PM	Wheel Loader, Rubber Tire, 3-Yard Unit w/o Operator (per Month)	Month

900-1.34 Wheel Loader, Rubber Tire, 3-Yard Unit with Operator:

Item No.	Item	Pay Unit
E900.34PD	Wheel Loader, Rubber Tire, 3-Yard Unit with Operator (per Day)	Day
E900.34PW	Wheel Loader, Rubber Tire, 3-Yard Unit with Operator (per Week)	Week
E900.34PM	Wheel Loader, Rubber Tire, 3-Yard Unit with Operator (per Month)	Month

900-1.35 Backhoe, Rubber Tire, without Operator:

The backhoe shall have an 18 foot digging capacity, extend-a-hoe case 580K, or equal.

Item No.	Item	Pay Unit
E900.35PD	Backhoe, Rubber Tire, without Operator (per Day)	Day
E900.35PW	Backhoe, Rubber Tire, without Operator (per Week)	Week
E900.35PM	Backhoe, Rubber Tire, without Operator (per Month)	Month

900-1.36 Backhoe, Rubber Tire, with Operator:

The backhoe shall have an 18 foot digging capacity, extend-a-hoe case 580K, or equal.

Item No.	Item	Pay Unit
E900.36PD	Backhoe, Rubber Tire, with Operator (per Day)	Day
E900.36PW	Backhoe, Rubber Tire, with Operator (per Week)	Week
E900.36PM	Backhoe, Rubber Tire, with Operator (per Month)	Month

900-1.37 Bulldozer, D-6 or equal without Operator:

Item No.	Item	Pay Unit
E900.37PD	Bulldozer, D-6 or equal, without Operator (per Day)	Day
E900.37PW	Bulldozer, D-6 or equal, without Operator (per Week)	Week
E900.37PM	Bulldozer, D-6 or equal, without Operator (per Month)	Month

900-1.38 Bulldozer, D-6 or equal with Operator:

Item No.	Item	Pay Unit
E900.38PD	Bulldozer, D-6 or equal, with Operator (per Day)	Day
E900.38PW	Bulldozer, D-6 or equal, with Operator (per Week)	Week
E900.38PM	Bulldozer, D-6 or equal, with Operator (per Month)	Month

900-1.39 Bulldozer, D-7 or equal without Operator:

Item No.	Item	Pay Unit
E900.39PD	Bulldozer, D-7 or equal, without Operator (per Day)	Day
E900.39PW	Bulldozer, D-7 or equal, without Operator (per Week)	Week
E900.39PM	Bulldozer, D-7 or equal, without Operator (per Month)	Month

900-1.40 Bulldozer, D-7 or equal with Operator:

Item No.	Item	Pay Unit
E900.40PD	Bulldozer, D-7 or equal, with Operator (per Day)	Day
E900.40PW	Bulldozer, D-7 or equal, with Operator (per Week)	Week
E900.40PM	Bulldozer, D-7 or equal, with Operator (per Month)	Month

900-1.41 Bucket Truck without Operator:

The bucket truck shall be a Baker Versalift VO-50 or equal. The truck shall have an articulate, telescopic boom with a minimum of a forty (40ft) foot reach.

Item No.	Item	Pay Unit
E900.41PD	Bucket Truck without Operator (per Day)	Day
E900.41PW	Bucket Truck without Operator (per Week)	Week
E900.41PM	Bucket Truck without Operator (per Month)	Month

900-1.42 Single Axle Dump Truck with Operator:

Single axle dump trucks equipped with tarps as required. Trucks must be fully licensed and insured. The vehicle and its driver must be in compliance with current **NYSDMV and Federal** regulations. Bid price shall include fuel, maintenance, and repair of vehicles.

Item No.	Item	Pay Unit
E900.42PH	Single Axle Dump Truck with Operator (per Hour)	Hour
E900.42PD	Single Axle Dump Truck with Operator (per Day)	Day
E900.42PW	Single Axle Dump Truck with Operator (per Week)	Week
E900.42PM	Single Axle Dump Truck with Operator (per Month)	Month

900-1.43 Tandem Axle Dump Truck with Operator:

Ten (10) wheel tandem axle dump trucks equipped with tarps as required. Trucks must be fully licensed and insured. The vehicle and its driver must be in compliance with current **NYSDMV and Federal** regulations. Bid price shall include fuel, maintenance, and repair of vehicles.

Item No.	Item	Pay Unit
E900.43PH	Tandem Axle Dump Truck with Operator (per Hour)	Hour
E900.43PD	Tandem Axle Dump Truck with Operator (per Day)	Day
E900.43PW	Tandem Axle Dump Truck with Operator (per Week)	Week
E900.43PM	Tandem Axle Dump Truck with Operator (per Month)	Month

900-1.44 Tri-Axle Dump Truck with Operator:

Tri-axle dump trucks equipped with tarps as required. Trucks must be fully licensed and insured. The vehicle and its driver must be in compliance with current **NYSDMV and Federal** regulations. Bid price shall include fuel, maintenance, and repair of vehicles.

Item No.	Item	Pay Unit
E900.44PH	Tri-Axle Dump Truck with Operator (per Hour)	Hour
E900.44PD	Tri-Axle Dump Truck with Operator (per Day)	Day
E900.44PW	Tri-Axle Dump Truck with Operator (per Week)	Week
E900.44PM	Tri-Axle Dump Truck with Operator (per Month)	Month

900-1.45 Low-Boy Tractor Trailer, 20 Ton Capacity with Operator:

Equipped with tarps as required. Trucks must be fully licensed and insured. The vehicle and its driver must be in compliance with current **NYSDMV and Federal** regulations. Bid price shall include fuel, maintenance, and repair of vehicles.

Item No.	Item	Pay Unit
E900.45PH	Low-Boy Tractor Trailer, 20 Ton Capacity with Operator (per Hour)	Hour
E900.45PD	Low-Boy Tractor Trailer, 20 Ton Capacity with Operator (per Day)	Day
E900.45PW	Low-Boy Tractor Trailer, 20 Ton Capacity with Operator (per Week)	Week
E900.45PM	Low-Boy Tractor Trailer, 20 Ton Capacity with Operator (per Month)	Month

900-1.46 Rotary Broom Sweeper without Operator:

Self-propelled heavy-duty rotary broom sweeper Lay Mor 8-B or equal.

Item No.	Item	Pay Unit
E900.46PD	Rotary Broom Sweeper without Operator (per Day)	Day
E900.46PW	Rotary Broom Sweeper without Operator (per Week)	Week
E900.46PM	Rotary Broom Sweeper without Operator (per Month)	Month

900-1.47 Rotary Broom Sweeper with Operator:

Self-propelled heavy-duty rotary broom sweeper Lay Mor 8-B or equal.

Item No.	Item	Pay Unit
E900.47PD	Rotary Broom Sweeper with Operator (per Day)	Day
E900.47PW	Rotary Broom Sweeper with Operator (per Week)	Week
E900.47PM	Rotary Broom Sweeper with Operator (per Month)	Month

900-1.48 Mower, Side and Rear Mounted Flail Mowers without Operator:

Heavy duty four (4) wheel tractor with side and rear mounted flail mowers.

Item No.	Item	Pay Unit
E900.48PD	Mower, Side and Rear Mounted Flail, without Operator (per Day)	Day
E900.48PW	Mower, Side and Rear Mounted Flail, without Operator (per Week)	Week
E900.48PM	Mower, Side and Rear Mounted Flail, without Operator (per Month)	Month

900-1.49 Mower with Brush Hog without Operator:

Heavy duty four (4) wheel tractor with brush hog.

Item No.	Item	Pay Unit
E900.49PD	Mower with Brush Hog without Operator (per Day)	Day
E900.49PW	Mower with Brush Hog without Operator (per Week)	Week
E900.49PM	Mower with Brush Hog without Operator (per Month)	Month

900-1.50 185 CFM Compressor without Operator:

Item No.	Item	Pay Unit
E900.50PD	185 CFM Compressor without Operator (per Day)	Day
E900.50PW	185 CFM Compressor without Operator (per Week)	Week
E900.50PM	185 CFM Compressor without Operator (per Month)	Month

900-1.51 Street Sweeper with Operator:

Broom type front loader Elgin, pelican, or equal.

Item No.	Item	Pay Unit
E900.51PD	Street Sweeper with Operator (per Day)	Day
E900.51PW	Street Sweeper with Operator (per Week)	Week
E900.51PM	Street Sweeper with Operator (per Month)	Month

900-1.52 Brush Chipper with Operator:

The brush chipper shall be a Vermeer BC1800A or equal equipped with automatic feed.

Item No.	Item	Pay Unit
E900.52PD	Brush Chipper without Operator (per Day)	Day
E900.52PW	Brush Chipper without Operator (per Week)	Week
E900.52PM	Brush Chipper without Operator (per Month)	Month

900-1.53 Skid Steer Loader without Operator:

To be a Bobcat 863F series or equal, with a 73HP engine minimum and High-flow Hydraulics 27 GPM minimum. Attachments for the Skid Steer Loader to be bid as price per day added to the daily rate bid for the basic machine.

Item No.	Item	Pay Unit
E900.53PD	Skid Steer Loader without Operator (per Day)	Day
E900.53PW	Skid Steer Loader without Operator (per Week)	Week
E900.53PM	Skid Steer Loader without Operator (per Month)	Month

Skid Steer Loader Attachments:

E900.5301PD	Skid Steer Loader Auger Attachment (per Day)	Day
E900.5302PD	Skid Steer Loader Breakers Attachment (per Day)	Day
E900.5303PD	Skid Steer Loader Planer Attachment (per Day)	Day
E900.5304PD	Skid Steer Loader Wheel Saw Attachment (per Day)	Day
E900.5305PD	Skid Steer Loader Combination Bucket Attachment (per Day)	Day
E900.5306PD	Skid Steer Loader Sweeper Attachment (per Day)	Day
E900.5307PD	Skid Steer Loader Trenchers Attachment (per Day)	Day

900-1.54 Chassis Mounted Spray Patcher without Operator:

Spray patcher to be chassis mounted Rosco RA-300 or equal.

Item No.	Item	Pay Unit
E900.54PD	Chassis Mounted Spray Patcher without Operator (per Day)	Day
E900.54PW	Chassis Mounted Spray Patcher without Operator (per Week)	Week
E900.54PM	Chassis Mounted Spray Patcher without Operator (per Month)	Month

900-1.55 Chassis Mounted Spray Patcher with Operator:

Spray patcher to be chassis mounted Rosco RA-300 or equal.

Item No.	Item	Pay Unit
E900.55PD	Chassis Mounted Spray Patcher with Operator (per Day)	Day
E900.55PW	Chassis Mounted Spray Patcher with Operator (per Week)	Week
E900.55PM	Chassis Mounted Spray Patcher with Operator (per Month)	Month

900-1.56 Trailer Mounted Spray Patcher without Operator:

Spray patcher to be chassis mounted Rosco RA-300 or equal.

Item No.	Item	Pay Unit
E900.56PD	Trailer Mounted Spray Patcher without Operator (per Day)	Day
E900.56PW	Trailer Mounted Spray Patcher without Operator (per Week)	Week
E900.56PM	Trailer Mounted Spray Patcher without Operator (per Month)	Month

900-1.57 Trailer Mounted Spray Patcher with Operator:

Spray patcher to be chassis mounted Rosco RA-300 or equal.

Item No.	Item	Pay Unit
E900.57PD	Trailer Mounted Spray Patcher with Operator (per Day)	Day
E900.57PW	Trailer Mounted Spray Patcher with Operator (per Week)	Week
E900.57PM	Trailer Mounted Spray Patcher with Operator (per Month)	Month

900-1.58 Flusher/Vacuum Truck without Operator:

Combination sewer flusher and vacuum unit, vactor 2100 series, or equal.

Item No.	Item	Pay Unit
E900.58PD	Flusher/Vacuum Truck without Operator (per Day)	Day
E900.58PW	Flusher/Vacuum Truck without Operator (per Week)	Week
E900.58PM	Flusher/Vacuum Truck without Operator (per Month)	Month

900-1.59 Flusher/Vacuum Truck with Operator:

Combination sewer flusher and vacuum unit, vactor 2100 series, or equal.

Item No.	Item	Pay Unit
E900.59PD	Flusher/Vacuum Truck with Operator (per Day)	Day
E900.59PW	Flusher/Vacuum Truck with Operator (per Week)	Week
E900.59PM	Flusher/Vacuum Truck with Operator (per Month)	Month

900-1.60 Shoring Equipment, Trench Boxes without Operator:

Item No.	Item	Pay Unit
E900.60PD	Shoring Equipment, Trench Boxes without Operator (per Day)	Day
E900.60PW	Shoring Equipment, Trench Boxes without Operator (per Week)	Week
E900.60PM	Shoring Equipment, Trench Boxes without Operator (per Month)	Month

900-1.61 Wood Grinder with Operator:

Large tub or horizontal wood grinder Mobark 133, Mobark 5600 or equivalent, capable of grinding large trees and stumps.

Item No.	Item	Pay Unit
E900.61PH	Wood Grinder with Operator (per Hour)	Hour
E900.61PD	Wood Grinder with Operator (per Day)	Day
E900.61PW	Wood Grinder with Operator (per Week)	Week
E900.61PM	Wood Grinder with Operator (per Month)	Month

900-1.62 Topsoil Shredder with Operator:

Large with 3/4 inch sieve.

Item No.	Item	Pay Unit
E900.62PD	Topsoil Shredder with Operator (per Day)	Day

900-1.63 Mat Smoothness Machine/Material Transfer Device with Operator:

Item No.	Item	Pay Unit
E900.63PD	Mat Smoothness Machine/Mat. Transfer Device with Op. (per Day)	Day

SECTION E900 – RENTAL EQUIPMENT

900-1.64 Movement of Equipment:

After initial move of equipment (rental) to a single jobsite, any move to an additional jobsite will be paid per move on a per hour basis between jobsites. **Note:** On all equipment rental charges, portal to portal costs will not be paid for on an hourly rate, vendor to include these charges in hourly rate bid.

Item No.	Item	Pay Unit
E900.64	Movement of Equipment (per Hour/Move)	Hour/Move

900-1.65 Snow and Ice Removal

Rental of dump trucks with plow and salter for snow and ice removal to include machine, operator, fuel, oil, grease, repairs, parts, maintenance, overhead and profit. There will be No Additional Payment for overtime.

Item No.	Item	Pay Unit
E900.6501PH	Snow and Ice Removal, Single Axle Dump Truck (per Hour)	Hour
E900.6501PH	Snow and Ice Removal, Tandem Axle Dump Truck (per Hour)	Hour
E900.6501PH	Snow and Ice Removal, Tri-Axle Dump Truck (per Hour)	Hour

900-1.66 thru 900-1.75 Portable Standby Generator

All generators shall be 3 Phase. Unit price to include delivery to location directed by ordering Agency.

Item No.	Item	Pay Unit
E900.66PH	Portable Standby Generator 100 Kw @ 208 VAC	Hour
E900.66PD	Portable Standby Generator 100 Kw @ 208 VAC	Day
E900.66PM	Portable Standby Generator 100 Kw @ 208 VAC	Month
E900.6601	Portable Standby Generator 100 Kw @ 208 VAC, Running Time Premium/Hour	Hour
E900.6602	Portable Standby Generator 100 Kw @ 208 VAC, Delivery/Pick-up	Lump Sum
E900.6603	Portable Standby Generator 100 Kw @ 208 VAC, (Extra Cable, Per Foot Per Day)	Foot/Day
E900.67PH	Portable Standby Generator 150 Kw @ 208 VAC	Hour
E900.67PD	Portable Standby Generator 150 Kw @ 208 VAC	Day
E900.67PM	Portable Standby Generator 150 Kw @ 208 VAC	Month
E900.6701	Portable Standby Generator 150 Kw @ 208 VAC, Running Time Premium/Hour	Hour
E900.6702	Portable Standby Generator 150 Kw @ 208 VAC, Delivery/Pick-up	Lump Sum
E900.6703	Portable Standby Generator 150 Kw @ 208 VAC, Extra Cable, Per Foot Per Day	Foot/Day
E900.68PH	Portable Standby Generator 50 Kw @ 240 VAC	Hour
E900.68PD	Portable Standby Generator 50 Kw @ 240 VAC	Day
E900.68PM	Portable Standby Generator 50 Kw @ 240 VAC	Month
E900.6801	Portable Standby Generator 50 Kw @ 240 VAC, Running Time Premium/Hour	Hour
E900.6802	Portable Standby Generator 50 Kw @ 240 VAC, Delivery/Pick-up	Lump Sum
E900.6803	Portable Standby Generator 50 Kw @ 240 VAC, Extra Cable, Per Foot Per Day	Foot/Day

SECTION E900 – RENTAL EQUIPMENT

Item No.	Item	Pay Unit
E900.69PH	Portable Standby Generator 150 Kw @ 240 VAC	Hour
E900.69PD	Portable Standby Generator 150 Kw @ 240 VAC	Day
E900.69PM	Portable Standby Generator 150 Kw @ 240 VAC	Month
E900.6901	Portable Standby Generator 150 Kw @ 240 VAC, Running Time Premium/Hour	Hour
E900.6902	Portable Standby Generator 150 Kw @ 240 VAC, Delivery/Pick-up	Lump Sum
E900.6903	Portable Standby Generator 150 Kw @ 240 VAC, Extra Cable, Per Foot Per Day	Foot/Day
E900.70PH	Portable Standby Generator 100 Kw @ 480 VAC	Hour
E900.70PD	Portable Standby Generator 100 Kw @ 480 VAC	Day
E900.70PM	Portable Standby Generator 100 Kw @ 480 VAC	Month
E900.7001	Portable Standby Generator 100 Kw @ 480 VAC, Running Time Premium/Hour	Hour
E900.7002	Portable Standby Generator 100 Kw @ 480 VAC, Delivery/Pick-up	Lump Sum
E900.7003	Portable Standby Generator 100 Kw @ 480 VAC, Extra Cable, Per Foot Per Day	Foot/Day
E900.71PH	Portable Standby Generator 200 Kw @ 480 VAC	Hour
E900.71PD	Portable Standby Generator 200 Kw @ 480 VAC	Day
E900.71PM	Portable Standby Generator 200 Kw @ 480 VAC	Month
E900.7101	Portable Standby Generator 200 Kw @ 480 VAC, Running Time Premium/Hour	Hour
E900.7102	Portable Standby Generator 200 Kw @ 480 VAC, Delivery/Pick-up	Lump Sum
E900.7103	Portable Standby Generator 200 Kw @ 480 VAC, Extra Cable, Per Foot Per Day	Foot/Day
E900.72PH	Portable Standby Generator 300 Kw @ 480 VAC	Hour
E900.72PD	Portable Standby Generator 300 Kw @ 480 VAC	Day
E900.72PM	Portable Standby Generator 300 Kw @ 480 VAC	Month
E900.7201	Portable Standby Generator 300 Kw @ 480 VAC, Running Time Premium/Hour	Hour
E900.7202	Portable Standby Generator 300 Kw @ 480 VAC, Delivery/Pick-up	Lump Sum
E900.7203	Portable Standby Generator 300 Kw @ 480 VAC, Extra Cable, Per Foot Per Day	Foot/Day
E900.73PH	Portable Standby Generator 500 Kw @ 480 VAC	Hour
E900.73PD	Portable Standby Generator 500 Kw @ 480 VAC	Day
E900.73PM	Portable Standby Generator 500 Kw @ 480 VAC	Month
E900.7301	Portable Standby Generator 500 Kw @ 480 VAC, Running Time Premium/Hour	Hour
E900.7302	Portable Standby Generator 500 Kw @ 480 VAC, Delivery/Pick-up	Lump Sum
E900.7303	Portable Standby Generator 500 Kw @ 480 VAC, Extra Cable, Per Foot Per Day	Foot/Day
E900.74PH	Portable Standby Generator 800 Kw @ 480 VAC	Hour
E900.74PD	Portable Standby Generator 800 Kw @ 480 VAC	Day
E900.74PM	Portable Standby Generator 800 Kw @ 480 VAC	Month
E900.7401	Portable Standby Generator 800 Kw @ 480 VAC, Running Time Premium/Hour	Hour

Item No.	Item	Pay Unit
E900.7402	Portable Standby Generator 800 Kw @ 480 VAC, Delivery/Pick-up	Lump Sum
E900.7403	Portable Standby Generator 800 Kw @ 480 VAC, Extra Cable, Per Foot Per Day	Foot/Day
E900.75PH	Portable Standby Generator 1250 Kw @ 480 VAC	Hour
E900.75PD	Portable Standby Generator 1250 Kw @ 480 VAC	Day
E900.75PM	Portable Standby Generator 1250 Kw @ 480 VAC	Month
E900.7501	Portable Standby Generator 1250 Kw @ 480 VAC, Running Time Premium/Hour	Hour
E900.7502	Portable Standby Generator 1250 Kw @ 480 VAC, Delivery/Pick-up	Lump Sum
E900.7503	Portable Standby Generator 1250 Kw @ 480 VAC, Extra Cable, Per Foot Per Day	Foot/Day

900-1.76 thru 900.1-82 Portable Pump Rental

Item No.	Item	Pay Unit
E900.7601	Portable Pump - Critically Silenced, Trailer Mount, 4" Self Priming, Solids Handling, 1,000 GPM @ 100' Total Head, 200 GPM @ 165' Total Head - Godwin CD103M or equal	Day
E900.7602	Portable Pump - Critically Silenced, Trailer Mount, 6" Self Priming, Solids Handling, 2,000 GPM @ 35' Total Head, 500 GPM @ 100' Total Head - Godwin CD150M or equal	Day
E900.7603	Portable Pump - Trailer Mount, 8" Self Priming, Solids Handling, 2,000 GPM @ 35' Total Head, 500 GPM @ 100' Total Head - Godwin CD200M or equal	Day
E900.7604	Portable Pump - Trailer Mount, 10" Self Priming, Solids Handling, 3,500 GPM @ 50' Total Head, 1,500 GPM @ 145' Total Head - Godwin CD250M or equal	Day
E900.7605	Portable Pump - Skid Mount, 12" Self Priming, Solids Handling, 4,500 GPM @ 60' Total Head, 2,000 GPM @ 85' Total Head - Godwin DPC300M or equal	Day
E900.7701	Heavy Duty Suction Hose w/one male and one female Bauer Style QD Fitting Installed on Hose, 4"x20'	Day
E900.7702	Heavy Duty Suction Hose w/one male and one female Bauer Style QD Fitting Installed on Hose, 6"x20'	Day
E900.7703	Heavy Duty Suction Hose w/one male and one female Bauer Style QD Fitting Installed on Hose, 8"x10'	Day
E900.7704	Heavy Duty Suction Hose w/one male and one female Bauer Style QD Fitting Installed on Hose, 10"x10'	Day
E900.7705	Heavy Duty Suction Hose w/one male and one female Bauer Style QD Fitting Installed on Hose, 12"x10'	Day
E900.7706	Layflat Discharge Hose w/one male and one female Bauer Style QD Fitting Installed on Hose, 4"x50'	Day
E900.7707	Layflat Discharge Hose w/one male and one female Bauer Style QD Fitting Installed on Hose, 6"x50'	Day
E900.7708	Layflat Discharge Hose w/one male and one female Bauer Style QD Fitting Installed on Hose, 8"x50'	Day
E900.7802	Rigid Galvanized Discharge Pipe, 6"X10' Godwin QD or Equal	Day

SECTION E900 – RENTAL EQUIPMENT

Item No.	Item	Pay Unit
E900.7803	Rigid Galvanized Discharge Pipe, 8"X10' Godwin QD or Equal	Day
E900.7804	Rigid Galvanized Discharge Pipe, 10"X10' Godwin QD or Equal	Day
E900.7805	Rigid Galvanized Discharge Pipe, 12"X10' Godwin QD or Equal	Day
E900.7901	Fittings - 90 Degree Bend, 4" Godwin QD or Equal	Day
E900.7902	Fittings - 90 Degree Bend, 6" Godwin QD or Equal	Day
E900.7903	Fittings - 90 Degree Bend, 8" Godwin QD or Equal	Day
E900.7904	Fittings - 90 Degree Bend, 10" Godwin QD or Equal	Day
E900.7905	Fittings - 90 Degree Bend, 12" Godwin QD or Equal	Day
E900.8001	Fittings - 45 Degree Bend, 4" Godwin QD or Equal	Day
E900.8002	Fittings - 45 Degree Bend, 6" Godwin QD or Equal	Day
E900.8003	Fittings - 45 Degree Bend, 8" Godwin QD or Equal	Day
E900.8004	Fittings - 45 Degree Bend, 10" Godwin QD or Equal	Day
E900.8005	Fittings - 45 Degree Bend, 12" Godwin QD or Equa l	Day
E900.8101	Fittings - Suction Screen, W/Female Bauer Style Fitting, 4" Godwin QD or Equal	Day
E900.8102	Fittings - Suction Screen, W/Female Bauer Style Fitting, 6" Godwin QD or Equal	Day
E900.8103	Fittings - Suction Screen, W/Female Bauer Style Fitting, 8" Godwin QD or Equal	Day
E900.8104	Fittings - Suction Screen, W/Female Bauer Style Fitting, 10" Godwin QD or Equal	Day
E900.8105	Fittings - Suction Screen, W/Female Bauer Style Fitting, 12" Godwin QD or Equal	Day
E900.8201	Temporary Road Ramps in 4" with Male and Female Connection Flanges, Low Profile for Easy Crossing, Load Capacity of 21,600 Pounds Per Axle, Minimum Passable Vehicle Width Shall Be 144", Fitted with 150 Lb. Flanged Inlet and Outlet Connections, Fitted with Drain Valve to Facilitate Draining After Usage Godwin or Equal	Day
E900.8202	Temporary Road Ramps in 6" with Male and Female Connection Flanges, Low Profile for Easy Crossing, Load Capacity of 21,600 Pounds Per Axle, Minimum Passable Vehicle Width Shall Be 144", Fitted with 150 Lb. Flanged Inlet and Outlet Connections, Fitted with Drain Valve to Facilitate Draining After Usage Godwin or Equal	Day
E900.8203	Temporary Road Ramps in 8" with Male and Female Connection Flanges, Low Profile for Easy Crossing, Load Capacity of 21,600 Pounds Per Axle, Minimum Passable Vehicle Width Shall Be 144", Fitted with 150 Lb. Flanged Inlet and Outlet Connections, Fitted with Drain Valve to Facilitate Draining After Usage Godwin or Equal	Day
E900.8204	Temporary Road Ramps in 10" with Male and Female Connection Flanges, Low Profile for Easy Crossing, Load Capacity of 21,600 Pounds Per Axle, Minimum Passable Vehicle Width Shall Be 144", Fitted with 150 Lb. Flanged Inlet and Outlet Connections, Fitted with Drain Valve to Facilitate Draining After Usage Godwin or Equal	Day
E900.8205	Temporary Road Ramps in 12" with Male and Female Connection Flanges, Low Profile for Easy Crossing, Load Capacity of 21,600 Pounds Per Axle, Minimum Passable Vehicle Width Shall Be 144", Fitted with 150 Lb. Flanged Inlet and Outlet Connections, Fitted with Drain Valve to Facilitate Draining After Usage Godwin or Equal	Day