COUNTY OF ERIE

MARK C. POLONCARZ
COUNTY EXECUTIVE

DIVISION OF PURCHASE

INVITATION TO BID

Bids, as stated below, will be received and publicly opened by the Division of Purchase in accordance with the attached specifications. FAX bids are unacceptable. Bids must be submitted in a sealed envelope to:

County of Erie
Division of Purchase
Attention: D. I. WEATHERBEE, BUYER (716) 858-6337
95 Franklin Street, Room 1254
Buffalo, New York 14202-3967

NOTE: Lower left hand corner of envelope MUST indicate the following:

BID NUMBER: 213045-004

OPENING DATE: FEBRUARY 27, 2013 TIME: 10:00 A.M.

FOR: HIGHWAY SUMMER MAINTENANCE MATERIALS PART II

NAME OF BIDDER: _____

If you are submitting other Invitations to Bid, each bid must be enclosed in a separate envelope.

Following EXHIBITS are attached to and made a part of the bid specifications, and part of any agreement entered into pursuant to this Invitation to Bid:

X EXHIBIT "A" - Assignment of Public Contracts
X EXHIBIT "B" - Purchases by Other Local Governments or Special Districts
___ EXHIBIT "C" - Construction/Reconstruction Contracts
___ EXHIBIT "D" - Bid Bond (Formal Bid)
N/A EXHIBIT "E" - Bid Bond (Informal Bid)
___ EXHIBIT "F" - Standard Agreement
X EXHIBIT "G" - Non-Collusive Bidding Certification
X EXHIBIT "H" - MBE/ WBE Commitment
X EXHIBIT "IC" - Insurance – "CLASSIFICATION A"
___ EXHIBIT "P" & EXHIBIT "PBI" - Performance Bond
___ EXHIBIT "Q" - Confined Space Program Certification

(Rev. 1/00)

EXHIBIT "G"

County of Erie

DIVISION OF PURCHASE

NON-COLLUSIVE BIDDING CERTIFICATION

By submission of this bid, each bidder and each person signing on behalf of any bidder certifies, and in the case of a joint bid each party thereto certifies as to its own organization, under penalty of perjury, that to the best of his knowledge and belief:

(1) the prices in this bid have been arrived at independently without collusion, consultation, communication, or agreement, for the purpose of restricting competition, as to any matter relating to such prices with any other bidder or any competitor;

(2) unless otherwise required by law, the prices which have been quoted in this bid have not been knowingly disclosed by the bidder and will not knowingly be disclosed by the bidder prior to opening, directly or indirectly, to any other bidder or to any competitor; and

(3) no attempt has been made or will be made by the bidder to induce any other person, partnership or corporation to submit or not to submit a bid for the purpose of restricting competition.

NOTICE

(Penal Law, Section 210.45)

IT IS A CRIME, PUNISHABLE AS A CLASS A MISDEMEANOR UNDER THE LAWS OF THE STATE OF NEW YORK, FOR A PERSON, IN AND BY A WRITTEN INSTRUMENT, TO KNOWINGLY MAKE A FALSE STATEMENT, OR TO MAKE A FALSE STATEMENT, OR TO MAKE A STATEMENT WHICH SUCH PERSON DOES NOT BELIEVE TO BE TRUE.

BID NOT ACCEPTABLE WITHOUT FOLLOWING CERTIFICATION:

Affirmed under penalty of perjury this _____ day of _____, 20 _____

TERMS _____ DELIVERY DATE AT DESTINATION _____

FIRM NAME _____

ADDRESS _____

_____ ZIP _____

AUTHORIZED SIGNATURE _____

TYPED NAME OF AUTHORIZED SIGNATURE

TITLE _____ TELEPHONE NO. _____

(Rev.1/2000)

County of Erie

DIVISION OF PURCHASE
BID SPECIFICATIONS

BID NO 213045-004

Ship to: County of Erie
Attention: DPW Highways &
Address: Various Departments

Ship Via: Most Economical
Date Required at Destination: As Needed

ITEM NO.	QUAN-TITY	UM	CATALOG NO./DESCRIPTION	UNIT PRICE	TOTAL PRICE
			Please furnish pricing for Highway Maintenance Materials as per		
			The following specifications for the contract period April 1, 2013		
			through March 31, 2014.		
			Any Questions: Contact Linda King at 716-858-2073.		
			Note: See Exhibit "H"		
			(1) List of WBE/MBE as requested **OR**		
			(2) Complete the Waiver Form		
			One or the other **must** be completed and returned with the bid.		
			Package in order for your bid to be considered.		
			*New York State Prevailing wage rates apply. www.labor.state.ny.us		
			IMPORTANT PLEASE NOTE		
			ALL BIDDERS MUST SUBMIT (10) EXTRA COPIES OF ONLY		
			PRICING PAGES, CLEARLY MARKED "EXTRA COPIES" AND		
			PIT LOCATION INDICATED WITH COMPANY'S NAME. COPIES		
			SHOULD BE COLLATED AND STAPLED.		

NOTE: Bid results cannot be given over the phone. All requests for bid results should be submitted in writing or faxed to:

ERIE COUNTY DIVISION OF PURCHASE
Freedom of Information Officer
95 Franklin Street, Rm. 1254
Buffalo, NY 14202
FAX #: **716/858-6465**

TOTAL NET BID DELIVERED INSIDE _____

NAME OF BIDDER _____

(Rev. 9/95)

County of Erie

DIVISION OF PURCHASE

INSTRUCTIONS TO BIDDERS (FORMAL)

1. BID SHALL BE SUBMITTED ON THESE COUNTY OF ERIE BID FORMS or bid will not be considered. Bid must be typed or printed in ink. Original autograph signatures in ink are required. Facsimile or rubber stamp signatures will not be accepted. ALL PAGES OF THIS BID DOCUMENT MUST BE RETURNED INTACT.

2. LATE PROPOSALS. Any bids received in the Erie County Division of Purchase after the date and time prescribed will not be considered for contract award.

3. EMERGENCY CLOSINGS. In the event the closing of certain County facilities and/or operations and/or services due to any flood, fire, fire drill, power failure, uncontrolled weather conditions or other cause beyond the Division of Purchase control, only bids received in the Division of Purchase prior to the date and time or postmarked as of the date prescribed will be considered for contract award.

4. ANY CHANGE IN WORDING OR INTERLINEATION BY A BIDDER OF THE INQUIRY AS PUBLISHED BY THE COUNTY OF ERIE shall be reason to reject the proposal of such bidder, or in the event that such change in the Invitation to Bid is not discovered prior to entering into a contract, to void any contract entered into pursuant to such bid.

5. THE COUNTY RESERVES THE RIGHT TO REJECT any and all bids, to accept either in whole or in part any one bid or combination of bids, as may be provided in the bid specifications, or to waive any informalities in bids. The County does not obligate itself to accept the lowest or any other proposal.

6. AWARD TO THE LOWEST RESPONSIBLE BIDDER. For the purpose of determining which bidder is the lowest qualified responsible bidder, it shall be the lowest three bidders' responsibility, within FIVE DAYS of being so notified by the Division of Purchase, to present information and documentation to the Division of Purchase, to satisfy the County that the bidder possesses sufficient capital resources, skill, judgment and experience to perform the work or deliver the material, as per bid specifications.

7. CONTRACT(S) OR PURCHASE ORDER(S) WILL BE AWARDED after due consideration of the suitability of goods and/or services bid to satisfy these specifications, the total cost of such goods and/or services including all cost elements, and the timeliness of the agreed upon delivery date.

8. This EXECUTORY CLAUSE shall be a part of any agreement entered into pursuant to this bid:

IT IS UNDERSTOOD BY THE PARTIES THAT THIS AGREEMENT SHALL BE EXECUTORY ONLY TO THE EXTENT OF THE MONIES AVAILABLE TO THE COUNTY OF ERIE AND APPROPRIATED THEREFOR, AND NO LIABILITY ON ACCOUNT THEREOF SHALL BE INCURRED BY THE COUNTY BEYOND THE MONIES AVAILABLE AND APPROPRIATED FOR THE PURPOSE THEREOF.

9. FAILURE TO MEET DELIVERY SCHEDULE as per accepted bid may result in legal action by the County of Erie to recover damages.

10. PRICES SHALL BE QUOTED F.O.B. DESTINATION AND DELIVERED INSIDE. "Tailgate delivery" will not be accepted unless specified by the County.

11. COLLECT TRANSPORTATION CHARGES WILL NOT BE PAID BY THE COUNTY. All freight, cartage, rigging, postage or other transportation charges shall be prepaid and included in the bid. There will be no additional charges for delivery.

12. NO TAXES ARE TO BE BILLED TO THE COUNTY. Bids shall not include any Federal, State, or local excise, sales, transportation, or other tax, unless Federal or State law specifically levies such tax on purchases made by a political subdivision. The County of Erie Purchase Order is an exemption certificate. Any applicable taxes from which the County is <u>not</u> exempt shall be listed separately as cost elements, and added into the total net bid.

13. THE SUCCESSFUL BIDDER shall comply with all laws, rules, regulations and ordinances of the Federal Government, the State of New York and any other political subdivision of regulatory body which may apply to its performance under this contract.

County of Erie
DIVISION OF PURCHASE

14. GRATUITIES, ILLEGAL OR IMPROPER SCHEMES. The County may terminate this agreement if it is determined that gratuities in the form of entertainment, gifts or otherwise were offered or given by a vendor, his agent or representative to any County official or employee with a view towards securing favorable treatment with respect to the awarding of this bid or the performance of this agreement. The County may also terminate this agreement if it is determined that the successful bidder engaged in any other illegal or improper scheme promotive of favoritism or unfairness incidental to the bidding process or the performance of this agreement. In the event that it is determined that said improper or illegal acts occurred, the County shall be entitled to terminate this agreement and/or exercise any other remedy available to it under existing law.

15. INSURANCE shall be procured by the Successful Bidder before commencing work, no later than 14 days after notice of award and maintained without interruption for the duration of the Contract, in the kinds and amounts specified in Exhibit IC, unless otherwise stipulated in these Bid Specifications. IF THE INSURANCE IS NOT PROVIDED IN ACCEPTABLE FORM WITHIN THIS PERIOD OF TIME, THEN THE DIRECTOR OF PURCHASE MAY DECLARE THE VENDOR NONRESPONSIVE AND AWARD THE CONTRACT TO THE NEXT LOW RESPONSIBLE BIDDER.

CERTIFICATES OF INSURANCE shall be furnished by the successful bidder on Erie County Standard Insurance Certificate, Exhibit IC.

16. ANY CASH DISCOUNT which is part of bid will be considered as a reduction in the bid prices in determining the award of the bid. Date of invoice must not precede date of delivery. The County policy is to pay all claims in a timely manner within the specified time. However, if for some reason payment is delayed, the County will take the discount when payment is made. The County will not pay any interest charges, nor refund discount amounts taken after the discount period. If this is unsatisfactory, please quote net.

17. CHANGES IN THE WORK. The County may, as the need arises, through the Director of Purchase, order changes in the work through additions, deletions, or modifications without invalidating the contract. Compensation, as it may be affected by any change, shall be adjusted by agreement between the contractor and County through the Director of Purchase.

18. BID OFFERING MATERIAL OTHER THAN THAT OF SPECIFIED MANUFACTURER OR TRADE NAME will be considered unless stated otherwise. The use of the name of a particular manufacturer, trade name, or brand in describing an item does not restrict a bidder to that manufacturer or specific article. However, the substituted article on which a proposal is submitted must be of such character or quality that it would serve the purpose for which it is to be used equally well as the manufacturer or brand specified. Proposals will be accepted in accordance with specifications on file or approved equal.

19. IF MATERIAL OR SERVICES OTHER THAN THOSE SPECIFIED IN THIS BID DOCUMENT ARE OFFERED, the bidder must so state and furnish at the time of bid opening, if so requested, and as part of his bid the following information in duplicate:
(a) Complete description of the item offered, and detailed explanation of the differences between the item specified and the item offered. If, in the opinion of the Division of Purchase, sufficient detail is not presented as a part of the sealed bid to permit definitive evaluation of any substitute item, the bid will not be considered.
(b) Descriptive literature of item offered, for evaluation.
(c) List of installations in Erie County of the item offered.
(d) List of other installations.

20. ANY ADDITIONAL INFORMATION for which bidder desires to add to the bid shall be written on a separate sheet of paper, attached to and submitted with the formal sealed bid, to be read at the formal opening.

21. WORKMANSHIP MUST MEET WITH THE APPROVAL OF THE DEPARTMENT HEAD(S) INVOLVED, AND SHALL BE FIRST CLASS in every respect without exception and shall be equal to the best modern practices. Materials furnished are to be new and unused. All materials furnished or work performed are to be guaranteed free from defects. Anything found defective or not meeting specifications, no matter in what stage of completion, may be rejected and shall be made good by the contractor at his own expense.

22. CONTRACTOR SHALL CLEAN UP and remove all debris and rubbish resulting from the work and leave the premises broom clean to the approval of the department head.

County of Erie
DIVISION OF PURCHASE

23. THIS BID IS FIRM AND IRREVOCABLE for a period of 45 days from the date and time of the bid opening. If a contract is not awarded within the 45 day period, a bidder to whom the bid has not been awarded, may withdraw his bid by serving written notice of his intention to do so upon the Division of Purchase. Upon withdrawal of the bid pursuant to this paragraph, the Division of Purchase will forthwith return the bidder's security deposit.

24. PRICES CHARGED TO THE COUNTY OF ERIE are to be no higher than those offered to any other governmental or commercial consumer. If a bidder has a New York State or a Federal GSA contract for any of the items covered in this bid or any similar items, he shall so indicate that he has said contract on these bid papers and automatically supply a copy of this contract within five days after notification of award.

25. PRICE IS FIRM. The unit prices bid shall remain firm, and any other charges bid shall also remain firm, for delivery of the equipment, material, work, or services described in this bid. No cost increase shall be charged for any reason whatsoever.

26. EXTENSION OF PRICE PROTECTION. Any contract entered into pursuant to this bid to supply the County's requirements of goods and/or services for a definite period of time as stated in the attached specifications may be extended for not more than two successive periods of equal length at the same bid price upon the mutual agreement of the successful bidder and the County. All extensions shall be submitted in writing and shall have prior approval by the County of Erie, Director of Purchase.

27. IN EXECUTING THIS BID, THE BIDDER AFFIRMS that all of the requirements of the specifications are understood and accepted by the bidder, and that the prices quoted include all required materials and services. The undersigned has checked all of the bid figures, and understands that the County will not be responsible for any errors or omissions on the part of the undersigned in preparing this bid. Mistakes or errors in the estimates, calculations or preparation of the bid shall not be grounds for the withdrawal or correction of the bid or bid security. In case of error in extension of prices in the bid, the unit price will govern.

28. ACCOUNTABILITY. The undersigned shall be fully accountable for his or its performance under this bid, or any contract entered into pursuant to this bid, and agrees that he, or its officers, will answer under oath all questions relevant to the performance thereof and to any transaction, act or omission had, done or omitted in connection therewith if called before any Judicial, County or State officer or agency empowered to investigate the contract or his performance.

29. TERMINATION OF CONTRACT:

a. At its option, the County may at any time for any reason terminate this agreement and the Contractor shall immediately cease all work under the agreement upon receipt of written notice of such termination from the County.

b. In the event of termination for any reason other than the fault of the Contractor, or the nonavailability of funds as provided in the above Executory Clause, the Contractor shall be paid the amount due to date of termination, and all reasonable expenses caused by such termination.

30.THE SUCCESSFUL BIDDER TO WHOM THE BID IS AWARDED SHALL INDEMNIFY AND HOLD HARMLESS the County of Erie and its agents and employees from and against all claims, damages, losses or causes of action arising out of or resulting from such vendor's performance pursuant to this bid.

31. STATUS AS AN INDEPENDENT CONTRACTOR: The successful Bidder to whom the bid is awarded and the County agree that the Bidder and its officers, employees, agents, contractors, subcontractors and/or consultants are independent contractors and not employees of the County or any department, agency or unit thereof. In accordance with their status as independent contractors, the Bidder covenants and agrees that neither the Bidder nor any of its officers, employees, agents, contractors, subcontractors and/or consultants will hold themselves out as, or claim to be, officers or employees of the County or any department, agency or unit thereof.

32. GOVERNED BY NEW YORK LAW: This Agreement shall be construed and enforced in accordance with the laws of the State of New York. In addition, the parties hereby agree that for any cause of action arising out of this Agreement shall be brought in the County of Erie.

County of Erie

DIVISION OF PURCHASE

To facilitate correct drawing and execution of contract, bidder shall supply full information concerning legal status:

FIRM NAME _____

ADDRESS OF PRINCIPAL OFFICE STREET _____

CITY _____

AREA CODE _____ PHONE _____ STATE _____ ZIP _____

Check one: CORPORATION_____ PARTNERSHIP_____ INDIVIDUAL_____

INCORPORATED UNDER THE LAWS OF THE STATE OF _____

If foreign corporation, state if authorized to do business in the State of New York:

YES _____ NO _____

TRADE NAMES: _____

ADDRESS OF LOCAL OFFICE STREET _____

CITY _____

AREA CODE _____ PHONE _____ STATE _____ ZIP _____

NAMES AND ADDRESSES OF PARTNERS:

_____ _____

_____ _____

_____ _____

_____ _____

EXHIBIT "A"

County of Erie

MARK C. POLONCARZ
COUNTY EXECUTIVE

DIVISION OF PURCHASE

ASSIGNMENT OF PUBLIC CONTRACTS

GENERAL MUNICIPAL LAW - Section 109:

1. A clause shall be inserted in all specifications of contracts hereafter made or awarded by an officer, board or agency of a political subdivision, or any district therein, prohibiting any contractor, to whom any contract shall be let, granted or awarded, as required by law, from assigning, transferring, conveying, subletting or otherwise disposing of the same, or of his right, title or interest therein, or his power to execute such contract, to any other person or corporation without the previous consent in writing of the officer, board or agency awarding the contract.

2. If any contractor, to whom any contract is let, granted, or awarded, as required by law, by any officer, board or agency of a political subdivision, or of any district therein, without the previous written consent specified in subdivision one (1) of this section, assign, transfer, convey, sublet or otherwise dispose of such contract, or his right, title or interest therein, or his power to execute such contract to any other person or corporation, the officer, board or agency which let, made, granted or awarded such contract shall revoke and annul such contract, and the political subdivision or district therein, as the case may be, and such officer, board or agency shall be relieved and discharged from all liability and obligations growing out of such contract to such contractor, and to the person or corporation to which such contract shall have been assigned, transferred, conveyed, sublet or otherwise disposed of, and such contractor, and his assignee, transferee or sublessee shall forfeit and lose all monies, theretofore earned under such contract, except so much as may be required to pay his employees. The provisions of this section shall not hinder, prevent or affect any assignment by any such contractor for the benefit of his creditors made pursuant to the laws of the State.

NO ASSIGNMENT OF ANY AGREEMENT pursuant to this bid shall be made without specific prior approval, in writing, by the Erie County Director of Purchase.

(Rev. 12/01/93)

ERIE COUNTY OFFICE BUILDING, 95 FRANKLIN STREET, BUFFALO, NEW YORK 14202 (716) 858-6336

"EXHIBIT B"

COUNTY OF ERIE

MARK C. POLONCARZ
COUNTY EXECUTIVE
DIVISION OF PURCHASE

PURCHASES BY OTHER LOCAL GOVERNMENTS OR SPECIAL DISTRICTS

The Erie County Legislature has adopted the following resolution for the purpose of allowing the following-named local governmental or school districts to make purchases through the County bidding procedures.

Under the following conditions, the Director of Purchase may make purchasing services available to the following 88 participants:

1. When in the opinion of the Director of Purchase it will not create any burden or hardship upon the County and the anticipated prices will not be adversely affected thereby, the Director is authorized when he deems appropriate and as may be requested by the participants to provide in any particular County bid specification that the participants in Erie County shall have the right to make purchases based upon the bids received by the County.

2. The County Purchase Director, within the limits of his time and manpower, shall disseminate relevant contract information to the participants.

3. The participants in County contracts will issue purchase orders directly to vendors within the specified contract period referencing the County contract involved and be liable for any payments due on such purchase orders.

Bidders shall take notice that as a condition of the award of a County contract pursuant to these specifications, the successful bidder agrees to accept the award of a similar contract with any of the participants in Erie County if called upon to do so. The County, however, will not be responsible for any debts incurred by participants pursuant to this or any other agreement.

Necessary deviations from the County's specifications in the award of a participant's contract, particularly as such deviations may relate to quantities or delivery point, shall be a matter to be resolved between the successful bidder and participants. All inquiries regarding prospective contracts shall be directed to the attention of:

AKRON CENTRAL SCHOOL DISTRICT, District Clerk, 47 Bloomingdale Ave., Akron, NY 14001
AKRON VILLAGE OF, Clerk-Treasurer, 21 Main St., Akron, NY 14001
ALDEN CENTRAL SCHOOL DISTRICT, District Clerk, 13190 Park St., Alden, NY 14004
ALDEN TOWN OF, Town Clerk, Town Hall, 11901 Broadway, Alden, NY 14004
ALDEN VILLAGE OF, Village Clerk, 13336 Broadway, Alden, NY 14004
AMHERST CENTRAL SCHOOL DISTRICT, Business Manager , 4301 Main St., Amherst, NY 14226
AMHERST TOWN OF, Highway Superintendent, Town Hall, 5583 Main St., Williamsville, NY 14221
AMHERST TOWN OF, Town Supervisor, Town Hall, 5583 Main St., Williamsville, NY 14221
ANGOLA VILLAGE OF, Clerk-Treasurer, 41 Commercial St., Angola, NY 14006
AURORA TOWN OF, Town Clerk, Town Hall, 5 S. Grove St., E. Aurora, NY 14052
BLASDELL VILLAGE OF, Clerk-Treasurer, 121 Miriam St., Blasdell, NY 14219
BOCES, ERIE #1, Clifford N Crooks Svc. Ctr., 355 Harlem Rd. West Seneca NY 14224-1892
BOCES, ERIE CATTARAUGUS #2, Assistant Superintendent, 3340 Baker Rd., Orchard Park, NY 14127
BOSTON TOWN OF, Town Clerk, Town Hall, 8500 Boston State Rd., Boston, NY 14025
BRANT TOWN OF, Town Clerk, Town Hall, Brant North Collins Rd., Brant, NY 14027
BUFFALO BOARD OF EDUCATION, Purchasing Agent, 408 City Hall, Buffalo, NY 14202
BUFFALO CITY OF, Division of Purchasing, 1901 City Hall, Buffalo, NY 14202
BUFFALO SEWER AUTHORITY, General Manager, 1038 City Hall, Buffalo, NY 14202-3378
CHEEKTOWAGA CENTRAL SCHOOL DISTRICT, 3600 Union Rd., Cheektowaga, NY 14225
CHEEKTOWAGA-MARYVALE UNION FREE SCHOOL DISTRICT, District Clerk, 1050 Maryvale Dr., Cheektowaga, NY 14225-2386
CHEEKTOWAGA-SLOAN UNION FREE SCHOOL DISTRICT, District Clerk, 166 Halstead Ave., Sloan, NY 14212-2295
CHEEKTOWAGA TOWN OF, Town Hall, Broadway & Union Rds., Cheektowaga, NY 14227
CLARENCE CENTRAL SCHOOL DISTRICT, Business Administrator, 9625 Main St., Clarence, NY 14031-2083
CLARENCE TOWN OF, Town Clerk, 1 Town Place, Clarence, NY 14031
CLEVELAND HILL FIRE DISTRICT NO. 6, Secretary, 440 Cleveland Dr., Cheektowaga, NY 14225
CLEVELAND HILL U.F.S.D. @ CHEEKTOWAGA, Business Manager,105 Mapleview Dr., Cheektowaga, NY 14225

COLDEN TOWN OF, Deputy Town Clerk, Town Hall, S-8812 State Rd., Colden, NY 14033
COLLINS TOWN OF, Supervisor, Town Hall, P.O. Box 420, Collins, NY 14035
CONCORD TOWN OF, Town Clerk, Town Hall, Springville, NY 14141-0187
DEPEW UNION FREE SCHOOL DISTRICT, District Clerk, 591 Terrace Blvd., Depew, NY 14043
DEPEW VILLAGE OF, Village Clerk, Municipal Building, 85 Manitou St., Depew, NY 14043
EAST AURORA VILLAGE OF, Village Clerk, Village Hall, 571 Main St., East Aurora, NY 14052
EDEN TOWN OF, Town Clerk, 2795 East Church St., Eden, NY 14057
EGGERTSVILLE FIRE DISTRICT, Secretary/Treasurer, 1880 Eggert Rd., Eggertsville, NY 14226-2233
ELLWOOD FIRE DISTRICT #1, Secretary, Town of Tonawanda, 1000 Englewood Ave., Kenmore, NY 14223
ELMA TOWN OF, Town Clerk, Town Hall, 1600 Bowen Rd., Elma, NY 14059
ERIE COUNTY WATER AUTHORITY, Central Processing, 3030 Union Rd., Buffalo, NY 14227
EVANS TOWN OF, Town Clerk, 42 N. Main St., Angola, NY 14006
FARNHAM VILLAGE OF, Village Clerk-Treasurer, 526 Commercial St., Farnham, NY 14061
FORKS FIRE DISTRICT #3, Commissioner, Town Cheektowaga, 3330 Broadway, Cheektowaga, NY 14227
GOWANDA VILLAGE OF, Clerk/Treasurer, 27 East Main St., Gowanda, NY 14070
GRAND ISLAND CENTRAL SCHOOL DISTRICT, District Clerk, 1100 Ransom Rd., Grand Island, NY 14072
GRAND ISLAND TOWN OF, Town Clerk, 2255 Baseline Rd., Grand Island, NY 14072
HAMBURG TOWN OF, Town Clerk, S-6100 S. Park Ave., Hamburg, NY 14075
HAMBURG VILLAGE OF, Village Clerk/Treasurer, 100 Main St., Hamburg, NY 14075
HOLLAND FIRE DISTRICT #1, Town of Holland, Holland, NY 14080
HOLLAND TOWN OF, Town Clerk, 47 Pearl St., Holland, NY 14080
HOPEVALE UNION FREE SCHOOL DISTRICT, District Clerk, 3780 Howard Rd., Hamburg, NY 14075
IROQUOIS CENTRAL SCHOOL DISTRICT, Girdle Rd., Elma, NY 14059
KENILWORTH FIRE DISTRICT #2, Commissioner, Tn. Tonawanda, 84 Hawthorne Ave., Buffalo, NY 14223
KENMORE-TN OF TONAWANDA UNION FREE SCHOOL DISTRICT, District Clerk, 1500 Colvin Blvd., Buffalo NY 14223
KENMORE VILLAGE OF, Village Clerk-Treasurer, Municipal Building, Kenmore, NY 14217
LACKAWANNA CITY OF, City Clerk, Lackawanna City Hall, 714 Ridge Rd., Lackawanna, NY 14218
LAKE VIEW FIRE DISTRICT, Fire Commissioner, Lakeview & Burke Roads, Lake View, NY 14085
LANCASTER TOWN OF, Town Clerk, 21 Central Avenue, Lancaster, NY 14086
LANCASTER VILLAGE OF, Clerk-Treasurer, Municipal Building, 5423 Broadway, Lancaster, NY 14086
MARILLA TOWN OF, Marilla Town Hall, 1740 Two Rod Rd., Marilla, NY 14102
NEWSTEAD TOWN OF, Town Clerk, Town Hall, P.O. Box 227, Akron, NY 14001
NIAGARA FRONTIER TRANSPORTATION AUTHORITY, 181 Ellicott St., Buffalo, NY 14205
NORTH COLLINS TOWN OF, Town Clerk 2015 Spruce St., North Collins, NY 14111
NORTH COLLINS VILLAGE OF, Village Clerk, 10543 Main St., North Collins, NY 14111
ORCHARD PARK CENTRAL SCHOOL DISTRICT, Asst. Supt. Bus. & Support Svcs. 3330 Baker Rd., Orchard Park, NY 14127
ORCHARD PARK TOWN OF, Town Clerk, Municipal Bldg., 4295 S. Buffalo St., Orchard Park, NY 14127
ORCHARD PARK VILLAGE OF, Clerk, Municipal Bldg., 4295 S. Buffalo St., Orchard Park, NY 14127
SARDINIA TOWN OF, Town Clerk, Town Hall, Savage Rd., Sardinia, NY 14134
SHERIDAN PARK FIRE DISTRICT NO. 4, Secretary, 738 Sheridan Dr., Tonawanda, NY 14150
SLOAN VILLAGE OF, Clerk Treasurer, 425 Reiman St., Sloan, NY 14212
SNYDER VOL. FIRE DEPT., Fire Commissioner, 4531 Main Street, Snyder, NY 14226
SOUTH LINE FIRE DISTRICT #10, Fire Commissioner, 1049 S. French Rd., S. Cheektowaga, NY 14227
SOUTH WALES FIRE DISTRICT #1, Secretary/Treasurer, P.O.Box 94, South Wales, NY 14139
SPRING BROOK FIRE DISTRICT #1, Secretary, P.O. Box 97, Spring Brook, NY 14140
SPRINGVILLE VILLAGE OF, Clerk Treasurer, Village Office, 5 W. Main St., Springville, NY 14141
SWEET HOME CENTRAL SCHOOL DISTRICT, Director Finance & Plant Svcs., 1901 Sweet Home Rd., Amherst, NY 14228
TONAWANDA CITY OF, Mayor, 200 Niagara St., Tonawanda, NY 14150
TONAWANDA CITY OF, Superintendent, 150 Fillmore Avenue,Tonawanda, NY 14150
TONAWANDA CITY SCHOOL DISTRICT, District Clerk, 100 Hinds St., Tonawanda, NY 14150-1815
TONAWANDA TOWN OF, Town Clerk, Municipal Building, Kenmore, NY 14217
U-CREST FIRE DISTRICT #4, Fire Commissioner, 255 Clover Place, Cheektowaga, NY 14225
UNION FREE SCHOOL DISTRICT, Dist. Clerk, Tn. Tonawanda, 1500 Colvin Blvd., Kenmore, NY 14223
WALDEN FIRE DISTRICT #2, Fire Commissioner, 20 Pine Ridge Road, Cheektowaga, NY 14211
WALES TOWN OF, Town Clerk, Big Tree Rd., Wales Center, NY 14169
WEST SENECA CENTRAL SCHOOL DISTRICT, District Treasurer, 1397 Orchard Park Rd., West Seneca, NY 14224-4098
WEST SENECA FIRE DISTRICT #4, Fire Commissioner, 100 Lein Rd., West Seneca, NY 14224
WEST SENECA FIRE DISTRICT #5, Fire Commissioner, 2801 Seneca St., West Seneca, NY 14224
WEST SENECA TOWN OF, Town Clerk, 1250 Union Road, West Seneca, NY 14224
WILLIAMSVILLE CENTRAL SCHOOL DISTRICT, District Clerk, 105 Casey Rd, PO Box 5000, East Amherst NY 14051
WILLIAMSVILLE VILLAGE OF, 5565 Main St., Williamsville, NY 14231-1557
WYOMING, COUNTY OF, Office of the Board of Supervisors, 143 N Main St., Warsaw, NY 14569

REV. 7/09

County of Erie

MARK C. POLONCARZ
COUNTY EXECUTIVE
DIVISION OF PURCHASE

CONSTRUCTION/RECONSTRUCTION CONTRACTS

1. DISCRIMINATION. The successful bidder agrees:

(a) that in the hiring of employees for the performance of work under this contract or any subcontract hereunder, no contractor, subcontractor, nor any person acting on behalf of such contractor or subcontractor, shall by reason of race, creed, color, sex or national origin discriminate against any citizen of the State of New York who is qualified and available to perform the work to which the employment relates;

(b) that no contractor, subcontractor, nor any person on his behalf shall, in any manner, discriminate against or intimidate any employee hired for the performance of work under this contract on account of race, creed, color, sex or national origin;

(c) that there may be deducted from the amount payable to the contractor by the County of Erie under this contract a penalty of fifty dollars for each person for each calendar day during which such person was discriminated against or intimidated in violation of the provisions of the contract;

(d) that this contract may be cancelled or terminated by the County of Erie and all monies due or to become due hereunder may be forfeited, for a second or any subsequent violation of the terms or conditions of this section of the contract; and

(e) the aforesaid provisions of this section covering every contract for or on behalf of the County of Erie for the manufacture, sale or distribution of materials, equipment or supplies shall be limited to operations performed within the territorial limits of the State of New York. (N.Y. State Labor Law Article 8 Section 220-e)

(f) Provisions of the State Law Against Discrimination also prohibit discrimination in employment because of age.

2. CONSTRUCTION, RECONSTRUCTION, OR REPAIR CONTRACTS FOR PUBLIC WORKS FACILITIES are subject to minimum wage rates, as established by the State of New York Department of Labor. The successful bidder on any contract for public works to which the provisions of the New York State Labor Law Article 8 apply agrees that:

(a) No laborer, workman or mechanic in the employ of the contractor, subcontractor or other person doing or contracting to do the whole or a part of the work contemplated by the contract shall be permitted or required to work more than eight hours in any one calendar day or more than five days in any one week except in cases of extraordinary emergency including fire, flood or danger to life or property. (Section 220, subd. 2, N.Y. State Labor Law)

(b) Each laborer, workman or mechanic employed by the contractor, subcontractor or other person doing or contracting to do the whole or part of the work contemplated by the contract shall be paid not less than the hourly minimum rate of wage and provided supplements not less than the prevailing supplements as designated by the New York State Industrial Commission.
(Section 220, subd. 3, N.Y. State Labor Law)

Wage and supplement rates are on file in the Division of Purchase.

3. AFFIRMATIVE ACTION PROGRAM AFFECTING CONSTRUCTION CONTRACTS. The Erie County Legislature has adopted a resolution directing that County Construction Contracts require the contractor to take affirmative action to secure equal opportunity for minority group workers and to comply with the Affirmative Action Program of the County of Erie. The Legislative resolution provides that a contract for the purchase of equipment involving installation work by building trade employees shall be considered a construction contract if the number of such employees on the job site shall at any time exceed ten (10). If the contractor intends to have more than ten (10) such employees on the job site at any one time, it shall be the contractor's obligation to make a written request to the Director of the Division of Purchase for a copy of the special conditions pertaining to affirmative action. The contractor shall not, at any time, place more than ten (10) such employees on the job site except in compliance with the said resolution and the said special conditions.

EXHIBIT "H"

County of Erie

MARK C. POLONCARZ
COUNTY EXECUTIVE

DIVISION OF PURCHASE

MBE/WBE COMMITMENT

The Erie County Legislature enacted Local Law No. 5 requiring a minority and women-owned business utilization commitment by persons or firms contracting with the County of Erie for supplies, materials, equipment, and insurance.

SECTION 1.

A. The supplier of all purchase contracts involving an expenditure of more than $15,000.00 shall take affirmative action to utilize bona fide minority business enterprises (MBE) and women business enterprises (WBE) on all contracts with the County. Affirmative action shall include, but not limited to:

1. Utilizing a source list of MBEs and WBEs; and

2. Solicitation of bids from MBEs and WBEs; and

3. Providing MBEs and WBEs sufficient time to submit proposals in response to solicitations; and

4. Maintaining records showing utilization of MBEs and/or WBEs specific efforts to identify and utilize these companies; and

5. A goal of awarding at least ten percent (10%) of the total dollar value of the contract to MBEs and at least two percent (2%) of the total dollar value of the contract to WBEs or, for those contracts governed by federal or state regulations with respect to MBE and/or WBE hiring the prevailing percentage set forth therein, whichever is higher, subject to waiver as provided below.

B. All bidders must submit, with a bid, a list of all MBEs and WBEs from whom the supplier has solicited bids, or with whom the supplier has signed a binding contractual agreement, or with whom the contractor is presently negotiating an agreement, for the purpose of meeting the MBE and WBE utilization goals provided in subdivision (A) (5) above. A supplier's bid shall not be considered where the supplier fails to submit a list as provided for herein. A supplier's bid shall not be considered where examination of said list of MBEs and WBEs evidences failure by the supplier to comply with the affirmative action requirements provided herein, except that the County may, upon written request by the supplier, grant a complete or partial waiver of the provisions of subdivision (A) (5) where the availability of MBEs and/or WBEs in the market area of the contract is less than the ten percent (10%) MBE goal and two percent (2%) WBE goal.

C. As evidence of compliance with the goals set forth in subdivision (A) (5) above, the supplier shall submit to the Director or Purchasing, at the bid opening, a schedule for MBE and WBE participation listing the MBEs and WBEs with whom the supplier intends to utilize; specifying the agreed upon price to be paid for such goods and identifying in detail the contract item or items to be supplied by each MBE and WBE. A copy of the participating schedule will be forwarded to the Division of E.E.O. from the Division of Purchasing. Contingent upon a contract award, a letter of intent to enter into a purchase agreement, signed by both the supplier and the MBE and WBE (unless a waiver is requested in one of those categories), indicating the agreed upon price and scope of work, shall be provided.

D. As evidence of compliance with the goals set forth in subdivision (A) (5) above, the supplier shall provide to the County Division of E.E.O., copies of all the subcontracts and/or purchase agreements with the MBEs and WBEs within fifteen (15) days of contract award.

E. For the purpose of this section, the term "minority business enterprise" shall mean a business which performs a commercially useful function, at least fifty-one percent (51%) of which is owned by minority group members or, in the case of a publicly-owned business, at least fifty-one percent (51%) of all stock is owned by minority group members. Such ownership shall be certified by the County Division of E.E.O.

For the purposes of this paragraph, "minority group members" are citizens of the United States who are African-American, Hispanic, Asian-American and American-Indian.

F. For the purposes of this section, the term "women-owned business enterprise" shall mean a business which performs a commercially useful function, at least fifty-one percent (51%) of which is owned by a woman or women or, in the case of publicly-owned business, at lest fifty-one percent (51%) of all stock is owned by a woman or women. Such ownership shall be certified by the County Division of E.E.O.

NOTE:

It is the prime vendor's responsibility to obtain MBE/WBE vendors and NOT the County of Erie. However, some vendors may be obtained from:

Director
Erie County Division of E.E.O.
95 Franklin Street
6TH Floor
Buffalo, NY 14202
(716) 858-7542

BID WILL NOT BE CONSIDERED IF THIS FORM IS NOT SUBMITTED WITH BID AS REQUIRED, REGARDLESS OF THE BID AMOUNT.

BID NO.: _____
BID DATE: _____

ERIE COUNTY MINORITY/ WOMEN BUSINESS ENTERPRISE UTILIZATION REPORT - PART A

COMPANY:
AUTHORIZED REPRESENTATIVE:
ADDRESS: _____
TELEPHONE NUMBER: (___)_
BID NAME:

I. List actions taken to identify, solicit, and contact Minority Business Enterprises (MBE)/Women Business Enterprises (WBE) to bid on subcontracts for this project.

1.
2.
3.
4.
5.
6.

II. List all bona fide Minority/Women Business Enterprise subcontractors and suppliers solicited, contracted, or presently negotiating a contract in accordance with the minority business utilization goal set forth by the County of Erie. (Attach additional sheets if necessary.)

MBE/WBE OWNED FIRMS	SUPPLY/SERVICE	AMOUNT OF PROPOSAL	PRIOR CERTIFICATION	CONTRACT EXECUTED	REASON IF CONTRACT NOT AWARDED
Name: _____ Address: _____ _____ Telephone No. _____ IRS # _____				YES _____ NO _____	
Name: _____ Address: _____ _____ Telephone No. _____ IRS # _____				YES _____ NO _____	

MBE/WBE OWNED FIRMS	SUPPLY/SERVICE	AMOUNT OF PROPOSAL	PRIOR CERTIFICATION	CONTRACT EXECUTED	REASON IF CONTRACT NOT AWARDED
Name: _____ Address: _____ _____ Telephone No. _____ IRS # _____				YES _____ NO _____	
Name: _____ Address: _____ _____ Telephone No. _____ IRS # _____				YES _____ NO _____	
Name: _____ Address: _____ _____ Telephone No. _____ IRS # _____				YES _____ NO _____	

III. Total Dollar Amount to be subcontracted to
Minority Business Enterprise(s). $
Women Business Enterprise(s). $

IV. Total Amount of Bid $

V. MBE Percent (%) of project bid %
WBE Percent (%) of project bid %

VI. YOU MUST ATTACH COPIES OF RELEVANT CORRESPONDENCE AND DOCUMENTS, INCLUDING RETURN RECEIPTS.

_____
SIGNATURE OF AUTHORIZED REPRESENTATIVE DATE

(01/09)

MBE/WBE UTILIZATION REPORT - PART B

FINAL CERTIFICATION OF EXPENDITURES TO MBEs/WBEs

(To be completed by the prime vendor and submitted to the
Erie County Division of E.E.O. when contract is complete)

Erie County reserves the right to require documentation, including, but not limited to, cancelled checks to verify these amounts.

VENDOR: _____ BID NO. _____

MBE	TOTAL AMOUNT EXPENDED

WBE	

TOTAL OF ALL MBE SUBCONTRACTS $_____

TOTAL OF ALL WOMEN SUBCONTRACTS $_____

AMOUNT OF CONTRACT (PRIME) $_____

FINAL MBE PERCENTAGE $_____

FINAL WBE PERCENTAGE $_____

I _____, as an official representative of _____, do hereby certify that the information listed above is correct and complete.

SIGNATURE TITLE DATE

MAIL TO: Erie County Division of E.E.O.
95 Franklin Street
6th Floor
Buffalo, NY 14202

(01/09)

WAIVER RECOMMENDATION

COMPANY: X_____

ADDRESS:_X_____

TELEPHONE NUMBER: (X _____) _____ BID NO.: 213045-004

1. Vendor has made a good faith effort to subcontract on this bid for which minority/women's business enterprises bids could be solicited; and

2. The total percentage of the bid which could be subcontracted for which minority business enterprises bids could be solicited is less than 10% for MBEs and/or 2% WBEs.

A waiver as provided for by Erie County Local Law, is hereby requested on the grounds that there are no/insufficient (circle the appropriate term) minority/women's business enterprises in the market area of this bid.

1. _____ 6. _____

2. _____ 7. _____

3. _____ 8. _____

4. _____ 9. _____

5. _____ 10. _____

(Use additional sheets if necessary.)

If a partial waiver is granted, the Vendor will make a good faith effort to meet the reduced goal.

_____

DATE SIGNATURE OF AUTHORIZED COMPANY REPRESENTATIVE

Granted in Whole: _____

Granted in Part: _____

Comments:

_____

_____

_____

DIRECTOR OF E.E.O. DATE

(01/09)

COUNTY OF ERIE
STANDARD INSURANCE REQUIREMENTS

Vendor Insurance Classification A: Contracts Involving Construction or Maintenance

1. The contractor shall obtain, at his own cost and expense, the following insurance coverages with insurance companies licensed in the State of New York and shall provide a certificate of insurance as evidence of such coverages on the County of Erie Standard Insurance Certificate.

A. Commercial General Liability - with a minimum combined single limit of liability for Bodily Injury and Property Damage of $1,000,000 per occurrence and $2,000,000 general aggregate and $2,000,000 Products – Completed Operation Aggregate. The coverage shall include:
   - Premises and Operations
   - Products and Completed Operations
   - Independent Contractors
   - Blanket Broad Form Contractual Liability (sufficient to cover all liability assumed under contracts with the County of Erie)
   - Broad Form Property Damage
   - Explosion, Collapse and Underground Hazards (x, c, u) must NOT be excluded.

B. Automobile Liability - with a minimum combined single limit of liability for Bodily Injury and Property Damage of $1,000,000 each occurrence. The coverage shall include Owned, Hired, and Non-Owned Autos (Symbol "1" should be designated for Liability coverage on the Business Auto Policy).

C. Excess "Umbrella" Liability - with a minimum limit of $5,000,000 each occurrence / $5,000,000 aggregate.

D. Worker's Compensation and Employer's Liability - providing statutory coverage in compliance with the Worker's Compensation Law of the State of New York (Form C-105.2).

E. Disability Benefits - providing statutory coverage in compliance with the New York State Disability Benefits Law (Forms DB-120.1 or DB-155).

Failure to maintain coverage herein shall constitute a material breach of this contract and the Contractor shall suspend all work immediately upon such lapse in coverage.

2. Commercial General Liability, Automobile Liability and Excess "Umbrella" Liability shall name the County of Erie and any Board, Bureau, Commission or Agency thereof as additional insureds on ISO Form CG 2010 1185 Edition. Coverage should be provided on a primary and non-contributory bases. Designated Construction Project General Aggregate Limit Per Person Endorsement CG 2503 is required. Waiver of Subrogation is required on all lines in favor of Erie County.

3. All policies in which the County of Erie is named as an additional insured shall provide that:

A. The insurance company or companies issuing the policies shall have no recourse against the County of Erie for payment of any premiums or for assessments under any form of policy.

B. The insurance shall apply separately to each insured (except with respect to the limit of the liability).

4. Prior to cancellation, non-renewal or material change of the above policies, at least forty-five (45) days advance written notice shall be given to the County of Erie, Department of Law, 95 Franklin Street, Room 1634, Buffalo, N.Y. 14202, and the Agency requesting the certificate.

5. All certificates of insurance shall be approved by the Erie County Department of Law prior to the inception of any work.

6. The "ACCORD" form certificate may be used in place of the Erie County Standard Insurance Certificate, provided that all of the requirements set forth in the instructions for the Erie County Standard Insurance Certificate are incorporated into the "ACCORD" form certificate.

County of Erie Standard Insurance Certificate

THIS CERTIFICATE IS ISSUED AS A MATTER OF INFORMATION ONLY AND CONFERS NO RIGHTS UPON THE CERTIFICATE HOLDER. THIS CERTIFICATE DOES NOT AFFIRMATIVELY OR NEGATIVELY AMEND, EXTEND OR ALTER THE COVERAGE AFFORDED BY THE POLICIES BELOW. THIS CERTIFICATE OF INSURANCE DOES NOT CONSTITUTE A CONTRACT BETWEEN THE ISSUING INSURER(S), AUTHORIZED REPRESENTATIVE OR PRODUCER, AND THE CERTIFICATE HOLDER.

IMPORTANT: If the certificate holder is an ADDITIONAL INSURED, the policy(ies) must be endorsed. If SUBROGATION IS WAIVED, subject to the terms and conditions of the policy, certain policies may require an endorsement. A statement on this certificate does not confer rights to the certificate holder in lieu of such endorsement(s).

PRODUCER	CONTACT NAME	
	PHONE (A/C No. Ext) / FAX A/C No.	
	EMAIL ADDRESS	
	PRODUCER CUSTOMER ID #:	
	INSURER(S) AFFORDING COVERAGE	NAIC #
INSURED	INSURER A:	
	INSURER B:	
	INSURER C:	
	INSURER D:	
	INSURER E:	
	INSURER F:	

COVERAGES **CERTIFICATE NUMBER:** **REVISION NUMBER:**

THIS IS TO CERTIFY THAT THE POLICIES OF INSURANCE LISTED BELOW HAVE BEEN ISSUED TO THE INSURED NAMED ABOVE FOR THE POLICY PERIOD INDICATED. NOTWITHSTANDING ANY REQUIREMENT, TERM OR CONDITION OF ANY CONTRACT OR OTHER DOCUMENT WITH RESPECT TO WHICH THIS CERTIFICATE MAY BE ISSUED OR MAY PERTAIN, THE INSURANCE AFFORDED BY THE POLICIES DESCRIBED HEREIN IS SUBJECT TO ALL THE TERMS, EXCLUSIONS AND CONDITIONS OF SUCH POLICIES. LIMITS SHOWN MAY HAVE BEEN REDUCED BY PAID CLAIMS.

INSR LTR	TYPE OF INSURANCE	ADDL INSR	SUBR WVD	POLICY NUMBER	POLICY EFF (MM/DD/YYYY)	POLICY EXP MM/DD/YYYY)	LIMITS	
	GENERAL LIABILITY						EACH OCCURRENCE	$
	☐ COMMERCIAL GENERAL LIABILITY						DAMAGE TO RENTED PREMISES (Ea occurrence)	$
	☐ CLAIMS-MADE ☐ OCCUR						MED EXP (Any one person)	$
	☐						PERSONAL & ADV INJURY	$
	☐						GENERAL AGGREGATE	$
	GEN'L AGGREGATE LIMIT APPLIES PER:						PRODUCTS COMP/OP AGG	$
	☐ POLICY ☐ PRO-JECT ☐ LOC							$
	AUTOMOBILE LIABILITY						COMBINED SINGLE LIMIT (Ea accident)	$
	☐ ANY AUTO						BODILY INJURY (Per person)	$
	☐ ALL OWNED AUTOS						BODILY INJURY (Per accident)	$
	☐ SCHEDULED AUTOS						PROPERTY DAMAGE (Per accident)	$
	☐ HIRED AUTOS							$
	☐ NON-OWNED AUTOS							$
	☐ UMBRELLA LIAB ☐ OCCUR						EACH OCCURRENCE	$
	☐ EXCESS LIAB ☐ CLAIMS-MADE						AGGREGATE	$
	☐ DEDUCTIBLE							$
	☐ RETENTION $							$
	WORKERS COMPENSATION AND EMPLOYERS' LIABILITY						☐ WC STATUTORY LIMITS- ☐ OTHER-	$
	ANY PROPRIETOR/PARTNER/EXECUTIVE OFFICE/MEMBER EXCLUDED? (Mandatory in NH) Y/N ☐	N/A					E.L. EACH ACCIDENT	$
	If yes describe under DESCRIPTION OF OPERATIONS below						E.L. DISEASE - EA EMPLOYEE	$
							E.L.DISEASE - POLICY LIMIT	$

DESCRIPTION OF OPERATIONS / LOCATIONS / VEHICLES (Attach ACORD 101, Additional Remarks Schedule, if more space is required)

CERTIFICATE HOLDER	CANCELLATION
County of Erie 95 Franklin St Buffalo NY, 14202	SHOULD ANY OF THE ABOVE DESCRIBED POLICIES BE CANCELLED BEFORE THE EXPIRATION DATE THEREOF, NOTICE WILL BE DELIVERED IN ACCORDANCE WITH THE POLICY PROVISIONS. AUTHORIZED REPRESENTATIVE

X. FOR COUNTY USE ONLY:

Name of County Dept. Requesting Certificate _____

Purchase Order or Contact Number _____

Vendor Insurance Classification _____

INSTRUCTIONS FOR COUNTY OF ERIE STANDARD INSURANCE CERTIFICATE

I. Insurance shall be procured and certificates delivered before commencement of work or delivery of merchandise or equipment.

II. CERTIFICATES OF INSURANCE

A. Shall be made to the "County of Erie, 95 Franklin St, Buffalo NY, 14202"

B. Coverage must comply with all specifications of the contract.

C. Must be executed by an insurance company, agency or broker, which is licensed by the Insurance Department of the State of New York. If executed by a broker, notarized copy of authorization to bind or certify coverage must be attached.

III. Forward the completed certificate to: County of Erie, (Department or Division) responsible for entering into the agreement for construction, purchase, lease or service.

IV. Minimum coverage with limits are as follows:

Vendor Classification	A Construction and Maintenance	B Purchase or Lease of Merchandise or Equipment	C Professional Services	D Property Leased To Others Or Use Of Facilities Or Grounds	E Concession-aires Services	F Livery Services	G All Purposes Public Entity Contracts
Commercial Gen. Liab.	$1,000,000 per occ.	$1,000,000 CSL	$1,000,000 CSL	$1,000,000	$1,000,000 CSL	$1,000,000	$1,000,000 CSL
General Aggregate	$2,000,000	$2,000,000	$2,000,000	$2,000,000	$2,000,000	$2,000,000	$2,000,000
Products Completed Operations Liability	$2,000,000	$2,000,000	$2,000,000	$2,000,000	$2,000,000	$2,000,000	$2,000,000
Blanket Broad Form Contractual Liability	INCLUDE						
Contractual Liability		INCLUDE	INCLUDE	INCLUDE	INCLUDE	INCLUDE	INCLUDE
Broad Form P.D.	INCLUDE						
X.C.U. (explosion, collapse, Underground)	INCLUDE						
Liquor Law				INCLUDE	INCLUDE		
Auto Liab.	$1,000,000 CSL		$1,000,000 CSL	$1,000,000 CSL	$1,000,000 CSL	$1,000,000 CSL	$1,000,000 CSL
Owned	INCLUDE		INCLUDE	INCLUDE	INCLUDE	INCLUDE	INCLUDE
Hired	INCLUDE		INCLUDE	INCLUDE	INCLUDE	INCLUDE	INCLUDE
Non-Owned	INCLUDE		INCLUDE	INCLUDE	INCLUDE	INCLUDE	INCLUDE
Excess/Umbrella Liab.	$5,000,000	$1,000,000	$1,000,000	$1,000,000	$1,000,000	$5,000,000	$1,000,000
Worker's Compensation	STATUTORY	STATUTORY	STATUTORY	STATUTORY	STATUTORY	STATUTORY	STATUTORY
& Employer's Liability							
Disability Benefits	STATUTORY	STATUTORY	STATUTORY	STATUTORY	STATUTORY	STATUTORY	STATUTORY
Professional Liability			$5,000,000				
Erie County, To Be Named Add'l Insd.	Gen. Liab., Auto Liab., & Excess	Broad Form Vendors May Be Required	Gen. Liab., Auto Liab., & Excess	Gen. Liab., Auto Liab., & Excess	Gen. Liab., Auto Liab., & Excess	Gen. Liab., Auto Liab., & Excess	Gen. Liab., Auto Liab., & Excess

V. Construction contracts require excess Umbrella Liability limits of $5,000,000.

VI Coverage must be provided on a primary-non contributory bases.

VII. Designated Construction Project General Aggregate Limit Per Project Endorsement CG 25 03 is required.

VIII. In the event the concessionaire is required to have a N.Y.S. license to dispense alcoholic beverages an endorsement for liquor liability is required.

IX. Waiver of Subrogation: Required on all lines unless noted

X Transportation of people in buses, vans or station wagons requires $5,000,000 excess liability.

XI. Workers Compensation: State Workers' Compensation / Disability Benefits Law

Use Applicable Certificates Below:

Workers Compensation Forms

CE-200	Exemption
C105.2	Commercial Insurer
SI-12	Self Insurer
GSI-105.2	Group Self Insured
U-26.3	New York State Insurance Fund

DBL (Disability Benefits Law) Forms

CE-200	Exemption
DB-120.1	Insurers
DB-155	Self Insured

XII. The "ACORD" form certificate may be used in place of the County of Erie Standard Insurance Certificate, provided that all of the above referenced requirements are incorporated into the "ACORD" form certificate.

Edition Date: 7/23/2012

SPECIFICATIONS AND PROPOSAL FORM COVERING CONSTRUCTION AND MAINTENANCE MATERIALS REQUIRED BY THE ERIE COUNTY DEPARTMENT OF PUBLIC WORKS FOR THE YEAR BEGINNING APRIL 1, 2013

TABLE OF CONTENTS

VOLUME 2

Notice to Bidders		1
Delivery Schedule for selected items		4
SECTION 600 INCIDENTAL CONSTRUCTION		
Section 602	**Rehabilitation of Culvert and Storm Drain Pipe**	**5**
Section 603	**Culverts and Storm Drains**	**7**
	Corrugated Steel Pipe	8
	Corrugated Steel Pipe Arch (2 2/3 x 1/2)	9
	Galvanized Steel End Section-Pipe (2 2/3 x 1/2)	10
	Galvanized Steel Elbows and Tees Pipe (2 2/3 x 1/2)	11
	Welded Steel Pipe	11
	Corrugated Aluminum Pipe	12
	Reinforced Concrete Pipe	13
	Smooth Interior Corrugated Polyethylene Pipe	14
	Culverts and Storm Drains (As-Modified)	15
	Precast Concrete Box Culvert	19
	Weholite Profile Wall Polyethylene Pipe Model Specification for Culvert Reline Applications	22
	Polyethylene Profile Wall Pipe Liner	25
	PVC (Polyvinyl Chloride) Gravity Sewer Pipe and Fittings	27
	Flexible Sewer Line Repair Couplings/Donuts	27
Section 604	**Drainage Structures**	**29**
	Catch Basins	29
	Round, Square and Rectangular Adjusting Devices	39
	Precast Concrete Manholes and Riser Rings	40
Section 605	**Underdrains**	**45**
	Corrugated Steel Pipe – Type III	45
	Corrugated Polyethylene Underdrain Pipe	46
Section 606	**Guide Railing**	**47**
	Guide Railing	47
Section 608	**Sidewalks Driveways and Bicycle Paths**	**57**
	Portland Cement Concrete Sidewalks & Driveways	57
Section 609	**Curb and Curb & Gutter**	**58**
	Concrete Curb Type BB	58
	Concrete curb and Gutter Type BB	59
	Concrete Curb Repair	61
Section 610	**Turf and Wildflower Establishment**	**62**
	Establishing Turf	62

	Establishing Wildflowers	62
	Roadside Mowing	63
Section 613	**Topsoil**	**64**
	Furnishing of Topsoil	64
Section 614	**Care, Thinning and Removal of Trees**	**65**
	Tree Removal	65
	Removal of Existing Stumps by Grinding	65
	Tree Topping	65
Section 615	**Landscape Miscellaneous**	**67**
	Weed Control Mat	67
	Weed and Vegetation Control	71
Section 618	**Bituminous Material**	**72**
	Bituminous Materials	72
	Liquid Membrane Polymer	77
	Foamix ™	78
	Asphalt Emulsion Slurry Seal	80
	Synthetic Pavement	87
	Fiber Reinforced Bituminous Membrane Surface Treatment	88
	Price Adjustment For Liquid Bituminous Material	94
Section 619	**Maintenance and Protection of Traffic**	**97**
	Flasher Barricades	97
	Flashing Arrow Boards	98
	Temporary Concrete Barrier	100
	Portable Variable Message Signs (PVMS)	101
	Plastic Drums	102
Section 620	**Bank and Channel Protection**	**103**
	Stone Filling (Medium), PLACEMENT ONLY	103
	Stone Filling (Heavy), PLACEMENT ONLY	103
	Dry Rip Rap, PLACEMENT ONLY	103
Section 624	**Paved Gutters**	**104**
	Conventionally Formed or Machine Formed Concrete Gutter	104
Section 633	**Conditioning Existing Pavement**	**105**
	Fiber Reinforced Asphalt Joint and Crack Sealing	105
	Fiber Reinforced Asphalt Joint and Crack Sealing with Multi-Grade 10-30	107
Section 634	**Under Bridge Access for Bridge Maintenance**	**109**
	Materials and Equipment	109
Section 636	**Emergency Repairs**	**110**
	Emergency Highway Repair Overhead and Profit – Percent	110
	Emergency Bridge Repair Overhead and Profit – Percent	111
	As Directed Bridge Maintenance and Repair Overhead and Profit – Percent	112
Section 645	**Signs**	**113**
	Galvanized Sign Post – Open (Unistrut or equal)	113
	Galvanized Sign Post – Perforated (Unistrut or equal)	113
	Galvanized Sign Post – Non-Perforated (Unistrut or equal)	113
	Reflective Sheeting for Signs, Contract Requirements and Provisions	114

	ASTM Sheeting for Permanent Signing	115
	Section I Sheeting Pay Items	126
	Section II Sheeting Pay Items	128
	Railroad Crossing Package	129
Section 646	**Delineators, Reference Markers and Snowplowing Markers**	**130**
	Steel U channel	130
Section 652	**Furnishing and Applying Salts**	**131**
	Furnishing and Applying Liquid Salts	131
	Specification for Salt, Aggregate, Liquid Brine or Calcium Chloride Mix (Modified)	132
Section 655	**Frames, Grates, and Covers**	**133**
	Frames, Grates, and Covers	133
	Cast Iron Grates for Corrugated Metal and Plastic Pipe	134
	Miscellaneous Castings	134
	Cast Iron Manhole Frames and Covers	137
	Cast Iron Manhole Paving (Adjusting) Rings	137
Section 680	**Traffic Signals**	**141**
	Traffic Signals	141
	Portable Solar Power Traffic Signals (PSPTS)	146
Section 688	**Preformed Reflectorized Pavement Markings**	**147**
	Contract Requirements and Provisions	147
	Preformed Reflectorized Pavement Markings	151

SECTION 700 MATERIALS AND MANUFACTURING

Section 701	**Hydraulic Cements**	**152**
	Cementitous Materials per New York State Standard Specifications	152
Section 703	**Aggregates**	**153**
	Contract Requirements - Aggregates	153
	3/8 Surface Treatment Aggregates Crushed Gravel, Crushed Stone and Crushed Slag	154
	Aggregates – Crushed Stone	155
	Aggregates – Gravel	156
	Aggregates – Crushed Slag	157
	Aggregates - Miscellaneous Materials	158
Section 704	**Masonry Materials**	**159**
	E704.03 - Concrete Block (Drainage Structures)	159
Section 799	**Materials – Delivery**	**161**

SECTION 900 RENTAL OF EQUIPMENT

Section 900	Rental Equipment	162
General Municipal Law		
	Section 103-A, 103-B – Waiver of Immunity	179
	Section 109 – Assignment of Public Contracts	180
Labor Law Section 220 and 220-B		181
Non-Collusive Bidding Certification		182

NOTICE TO BIDDERS
SPECIFICATIONS AND PROPOSAL FORM COVERING
CONSTRUCTION AND MAINTENANCE MATERIALS
REQUIRED BY THE
ERIE COUNTY DEPARTMENT OF PUBLIC WORKS

FOR THE YEAR
BEGINNING APRIL 1, 2013

1. The purpose of the attached specifications is to describe the above mentioned materials by physical and chemical requirements.

2. Bids are solicited on construction and maintenance materials as shown by attached specifications and proposal form. Where noted New York State Department of Transportation Standard Specifications, Construction and Materials, dated May 1, 2008, and all addenda shall apply.

3. Purchase Orders will be issued to the lowest responsible bidder after due consideration has been given to the point of delivery, the location of the job site to which the material used will be hauled, and the cost of hauling.

4. The Purchaser reserves the right to reject any or all bids, or to accept, either in whole or in part, any one bid or combination of bids.

5. No quantities are given. Quotations on all items shall be for requirements to **MARCH 31, 2014.**

6. All references to New York State Specifications refer to the New York State Department of Transportation Standard Specifications, Construction and Materials, dated May 1, 2008 and all addenda.

7. The bid shall be signed by bidder in proper place on the last page of this proposal.

8. When a substitute material is submitted for bid, the bidder must provide, at the time of bid, a NYSDOT certification to the effect that the material is a suitable substitute or obtain pre-approval of the substitute material from Erie County Department of Public Works.

9. In submitting this bid the bidder declares that he is, or they are, the only person or persons interested in the said bid, that it is made without any connection with any person making another bid for the same materials; that the bid is in all respects fair and without collusion, fraud or mental reservation; and that no officer or employee of the County is directly or indirectly interested in said bid or in the supplies, or in any portion of the profits thereof.

    a. Each Vendor shall also furnish the County of Erie with a Certificate of Insurance indicating he is covered by Workmen's Compensation.

    b. All policies of insurance, together with endorsements thereon, must contain autograph countersignatures.

    c. No bid for materials, or supplies may be accepted from or contract awarded to any vendor who is in arrears to Erie County or who has defaulted on a contract or any other obligation to Erie County.

10. The Bidder hereby agrees to the provisions of Section 103-a, 103-b and 103-d, being part of Chapter 605 of the Laws of 1959 of the General Municipal Law which requires that upon the refusal of a person, when called before a grand jury to testify concerning any transaction or contract with the state, any political sub-division, thereof, a public authority or with any public department, agency or official of the state or of any political subdivision thereof or of a public authority, to sign a waiver of

immunity against subsequent criminal prosecution or to answer any relevant question concerning such transaction or contracts

a. Such person, and any firm, partnership or corporation of which he is a member, partner, director or officer shall be disqualified from thereafter selling to or submitting bids to, or receiving awards from, or entering into any contracts with any municipal corporation or any public department, agency or official thereof, for goods, work or services, for a period of five years after such refusal, and

b. Any and all contracts made with any municipal corporation or any public department, agency or official thereof, since the effective date of this law, by such person, and by any firm, partnership, or corporation of which he is a member, partner, director or officer may be canceled or terminated by the municipal corporation without incurring any penalty or damages on account of such cancellation or termination, but any monies owed by the municipal corporation for goods delivered or work done prior to the cancellation or termination shall be paid, and

c. Every contract hereafter made or awarded by a municipal corporation or any public department, agency or official thereof or by a fire district or any agency or official thereof, pursuant to bid, for work or services performed or to be performed or goods sold or to be sold, shall contain the following statement by the bidder, under penalty of perjury: Non-collusive bidding certification. The bidder certifies that:

    1). The bid has been arrived at by the bidder independently and has been submitted without collusion with any other vendor of materials, supplies, or equipment of the type described in the invitation or bids, and

    2). The content of the bid has not been communicated by the bidder, nor, to its best knowledge and belief, by any of its employees or agent of the bidder or its surety on any bond furnished herewith prior to the official opening of the bid."

11. The usage of F.O. B. trucks means the product will be picked up by the Purchasers truck at the vendors plant or pit.

12. All facilities selling by weight over scales must be tested and inspected according to New York State Agriculture & Markets Law, article 16, and article 1.0 of the NYCRR and provide proof of this testing and Inspection to the County when bid is submitted, or within five (5) days thereafter, in order for bid to be accepted. If the County does not receive such verification, it will presume the scales have not been tested and inspected.

13. ECDPW FORCE ACCOUNT INVOICE REQUIREMENTS FOR THE FOLLOWING ITEMS:

- Item E636.0101 – Emergency Highway Repair Overhead and Profit – Percent (Maximum Bid 20%)
- Item E636.0102 – Emergency Bridge Repair Overhead and Profit – Percent (Maximum Bid 20%)
- Item E636.0103 – As Directed Bridge Maintenance Work and Repair Work Overhead and Profit – Percent (Maximum Bid 20%)

Force account invoices for work done under the above items shall be prepared and submitted according to the following:

a. All documentation is to be crossed-checked for consistency before submittal to the County. Any submission found not to be sufficiently checked by the vendor prior to submission will be returned without further processing for correction.

b. All documentation is to be legible. Submissions containing illegible, cut off or mis-copied information will be returned to the vendor for correction without further processing.

c. Billing for force account work is to be governed by the requirements of Section 109-05 B. of the NYSDOT Standard Specifications.

d. NYSDOT Force Account forms or duplicate reproductions are to be used for force account documentation

e. Invoice materials are to be organized in an orderly fashion, i.e.:

    1) Invoice cover sheet on company letterhead

    2) Force Account Summation (MURK-13)

    3) Force Account Equipment Summary (MURK-17)

    4) Force Account Summary of Labor (MURK-12)

    5) Daily time sheets including materials and equipment used (each sheet signed by contractor and a county representative) (MURK-11).

    6) Certified Payroll reports

    7) Equipment cost reference sheets (i.e. Blue Book, Equipment Watch, Invoice from a rental agency, etc.). The reference material for a particular piece of equipment has to have an ID number that links it to the Murk 13 and Murk 17 forms.

    8) Invoices from service vendors (i.e. toilet rental, trucking, crane rental, etc.)

    9) Invoices from material suppliers, cross referenced with entries on the Murk 13 form.

    10) Subcontractor Invoices. If subcontractor invoices are included the subcontractor's invoices must contain all the information noted in items 1) – 9) above.

f. If any of the above invoice materials are missing, incomplete, illegible or otherwise unsuitable for review the submission will be returned to the contractor for correction without further processing.

g. Prevailing wages are to be paid on public works projects. If the wages paid to a particular worker or labor classification are not straight from the latest NYSDOL Prevailing Wage Rate listing and/or are influenced by a local labor agreement the contractor will provide documentation showing how the wage rate was arrived at and that it meets prevailing wage requirements.

Delivery time for special items on Spring Bid Book:

Glass Beads	- 15 days after receipt of order
Casting, Miscellaneous	- 60 days after receipt of order
Grates and Frames	- 60 days after receipt of order
Guide Rail	- 30 days after receipt of order
Paint: Federal Yellow	- 30 days after receipt of order
Traffic Zone	- 30 days after receipt of order
Post, Wood	- 60 days after receipt of order
Prefabricated Adjustment Rings for Manholes	- 60 days after receipt of order
Culvert Pipe and Related Items	- 30 days after receipt of order

SECTION 602 REHABILITATION OF CULVERT AND STORM DRAIN PIPE

602-1 DESCRIPTION. Rehabilitate culvert and storm drain pipe in accordance with Section 602 of the NYSDOT Standard Specifications of May 1, 2008.

PAYMENT WILL BE MADE UNDER:

ITEM NUMBER	ITEM	PAY UNIT	PRICE
602.2001	Paving Inverts with Portland Cement Concrete	Square Foot	_____
602.2101	Lining Culvert with Shotcrete	Square Foot	_____
602.25xx	Lining with High Density Polyethylene Pipe	Foot	_____
602.30xx	Lining with Polyvinyl Chloride Pipe	Foot	_____
602.35xx	Lining with Polyester Formed in Place Pipe Liner	Foot	_____
602.40xx	Lining with Corrugated Aluminum Pipe Type IR	Foot	_____
602.45xx	Lining with Aluminum Coated (Type 2) CSP Type IR, 12 gauge	Foot	_____
602.47xxxx	Lining with Aluminum Coated (Type 2) CSP Type IIR, 10 gauge	Foot	_____
602.50xxxx	Lining with Aluminum Structural Plate Pipe (9 x 2 ½)	Feet	_____
602.52xxxx	Lining with Aluminum Structural Plate Pipe Arch (9 x 2 ½)	Feet	_____
602.550101	Lining with Steel Tunnel Liner Plate 0.135 inch thick	Square Foot	_____
602.550102	Lining with Steel Tunnel Liner Plate 0.165 inch thick	Square Foot	_____
602.550103	Lining with Steel Tunnel Liner Plate 0.18 inch thick	Square Foot	_____
602.550104	Lining with Steel Tunnel Liner Plate 0.21 inch thick	Square Foot	_____
602.550105	Lining with Steel Tunnel Liner Plate 0.24 inch thick	Square Foot	_____
602.600101	Lining with Aluminum Tunnel Liner Plate 0.125 inch thick	Square Foot	_____
602.600102	Lining with Aluminum Tunnel Liner Plate 0.15 inch thick	Square Foot	_____
602.600201	Lining with Aluminum Tunnel Liner Plate 0.175 inch thick	Square Foot	_____

ITEM NUMBER	ITEM	PAY UNIT	PRICE
602.600202	Lining with Aluminum Tunnel Liner Plate 0.20 inch thick	Square Foot	_____
602.600301	Lining with Aluminum Tunnel Liner Plate 0.225 inch thick	Square Foot	_____
602.65xx	Lining with Concrete-Lined CSP (2 2/3 x ½)	Foot	_____
602.70xx	Lining with Concrete-Lined CSP (5 x 1)	Foot	_____
602.75xx	Lining with Polymer Coated CSP 12ga, (2 2/3 x ½)	Foot	_____
602.80xx	Lining with Polymer Coated CSP 12ga, (3 x 1) or (5 x 1)	Foot	_____

SECTION 603 CULVERTS AND STORM DRAINS

All pipe will meet the NYSDOT Standard Specification Section 603 as indicated by the Item No.

Price bid per linear foot of various size corrugated pipe to include connecting bands and bolts will be as follows:

1. For Round Corrugated Pipe

   A. 6" to 54" pipe, additional 1 foot (12") of pipe per bid price per foot.

   B. 60" and over additional 2 feet (24") of pipe as per bid price per foot.

2. For Pipe - Arch Corrugated Pipe

   A. 14" x 9" to 64" x 43" pipe, additional 1 foot (12") of pipe as per bid price per foot.

   B. 71" x 47" and over, additional 2 feet (24") of pipe as per bid price per foot.

Pipe specified as Polymer coated shall also meet the following requirements:

Corrugated steel pipe and pipe arches shall be precoated with P.V.C. plastiscol paint as per AASHTO M-246. Fabrication of the pipe and pipe arch shall be as per AASHTO M-245 and shall have 10 mils of coating on the interior of the pipe and 3 mils on the exterior (AASHTO M-246 Type B).

All Pipe Prices per linear foot will include F.0.B. any point in Erie County.

SECTION 603

CORRUGATED STEEL PIPE

Diameter	Gauge	603.05xxM Plain Galvanized L.F.	603.06xxM Corr. Steel Pipe-Paved Invert L.F. L.F.	E603.05xx Polymer Coated L.F.
6"	18	$	$	$
6"	16	$	$	$
12"	16	$	$	$
15"	16	$	$	$
18"	16	$	$	$
21"	16	$	$	$
24"	14	$	$	$
30"	14	$	$	$
36"	14	$	$	$
42"	12	$	$	$
48"	12	$	$	$
54"	12	$	$	$
60"	16	$	$	$
66"	10	$	$	$
72"	10	$	$	$
78"	8	$	$	$
84"	8	$	$	$
96"	8	$	$	$
102"	8	$	$	$
108"	8	$	$	$
120"	8	$	$	$

Where xx equals the pipe diameter in inches

SECTION 603

CORRUGATED STEEL PIPE ARCH (2 2/3 x 1/2)

Size Span x Rise	Gauge	603.08xxM Plain Galvanized	E603.08xx Polymer Coated	603.09xxM Bituminous Coated Invert Paved
14" x 9"	16	$	$	$
17" x 13"	16	$	$	$
21" x 15"	16	$	$	$
24" x 18"	16	$	$	$
28" x 20"	14	$	$	$
35" x 24"	14	$	$	$
42" x 29"	12	$	$	$
49" x 33"	12	$	$	$
57" x 38"	12	$	$	$
57" x 38"	10	$	$	$
64" x 43"	12	$	$	$
64" x 43"	10	$	$	$
71" x 47"	10	$	$	$
71" x 47"	8	$	$	$

Where xx equals the pipe diameter in inches

SECTION 603

GALVANIZED STEEL END SECTION - PIPE (2 2/3 x 1/2)

SIZE		Item 603.17xxM F.O.B. any point Erie County	SIZE		Item 603.18xxM F.O.B. any point in Erie County
Diameter	Gauge	Bid Price	Span/Rise	Gauge	Bid Price
12"	16	$	14" x 9"	16	$
15"	16	$	17" x 13"	16	$
18"	16	$	21" x 15"	16	$
21"	16	$	24" x 18"	16	$
24"	16	$	28" x 20"	16	$
30"	14	$	35" x 24"	14	$
36"	14	$	42" x 29"	14	$
42"	12	$	49" x 33"	12	$
48"	12	$	57" x 38"	12	$
54"	12	$	64" x 43"	12	$
60"	10	$	71" x 47"	10	$
66"	10	$			
72"	10	$			
78"	10	$			
84"	10	$			

Where xx equals the pipe diameter in inches

SECTION 603

GALVANIZED STEEL ELBOWS AND TEES PIPE (2 2/3 X 1/2)

SIZE		E603.9903xx ELBOW		E603.9904xx TEE	
DIAMETER / GAUGE					
6"	16	$ _____	EA	$ _____	EA
12"	16	$ _____	EA	$ _____	EA
15"	16	$ _____	EA	$ _____	EA
18"	16	$ _____	EA	$ _____	EA
24"	14	$ _____	EA	$ _____	EA

Where xx equals the pipe diameter in inches

ALL THE ABOVE F.O.B. ANY POINT ERIE COUNTY

ITEM E603.9901 - WELDED STEEL PIPE

Vendor to furnish and deliver in stock, reject, ERW pipe meeting ASTM A-500 Grade B. Pipe to be of uniform inside and outside diameters and without excessive weld beads for sleeve applications. Pipe must be weldable with standard manual stick procedures. Sizes will range from 2" up. Delivery will be to district 4 in the Town of Aurora.

Pipe F.O.B. Stockpile $ _____ /lb.

Delivery $ _____ /Load

The County reserves the right to canvas vendors for stock of pipe sizes best meeting its needs for a particular project.

SECTION 603

CORRUGATED ALUMINUM PIPE

Diameter	Gauge	603.40xx (6"-30") 603.41xx (36"-96") Corrugated Aluminum Pipe	605.08xx Perforated Aluminum Underdrain Corrugated Pipe	603.54xx Corrugated Aluminum Pipe End Sections
		Linear Feet	Linear Feet	Each
6"	18	$	$	$
6"	16	$	$	$
12"	16	$	$	$
15"	16	$	$	$
18"	16	$	$	$
21"	16	$	$	$
30"	14	$	$	$
36"	14	$	$	$
42"	12	$	$	$
48"	12	$	$	$
54"	12	$	$	$
60"	10	$	$	$
66"	10	$	$	$
72"	10	$	$	$
78"	8	$	$	$
84"	8	$	$	$
96"	8	$	$	$
102"	8	$	$	$
108"	8	$	$	$
120"	8	$	$	$

Where xx equals the pipe diameter in inches

SECTION 603

REINFORCED CONCRETE PIPE AS REQUESTED
BY
NEW YORK STATE SPECIFICATION FOR SECTION 603
Price quote per Linear Foot

Diameter	603.66xxM Reinforced Concrete Pipe Class IV Pick Up	Delivered	603.60xxM Reinforced Concrete Pipe Class III Pick Up	Delivered
12 inch	$	$	$	$
15 inch	$	$	$	$
18 inch	$	$	$	$
21 inch	$	$	$	$
24 inch	$	$	$	$
30 inch	$	$	$	$
36 inch	$	$	$	$
42 inch	$	$	$	$
48 inch	$	$	$	$
54 inch	$	$	$	$
60 inch	$	$	$	$
66 inch	$	$	$	$
72 inch	$	$	$	$
78 inch	$	$	$	$
84 inch	$	$	$	$
96 inch	$	$	$	$
102 inch	$	$	$	$
108 inch	$	$	$	$
120 inch	$	$	$	$

Where xx equals the pipe diameter in inches

SECTION 603

SMOOTH INTERIOR CORRUGATED POLYETHYLENE PIPE

All pipe will meet the requirements of NYSDOT Standard Specifications, where applicable and AASHTO Designation: ***M294.TYPE S*** or **TYPE SP** or as established by Erie County Department of Public Works.

MATERIALS

The smooth lined corrugated polyethylene pipe shall conform to the requirements of Subsection 706-12, Smooth Interior Corrugated Polyethylene Pipe, of the Standard Specifications.

The pipe also must exceed the minimum engineering property values as specified in Section 18 of the AASHTO Standard Specifications for Highway Bridges. These properties are listed below:

Section Properties - PE Corrugated Pipes

Normal Size (in.)	Min I.D. (in.)	Max O.D. (in.)	Min A (sq. in./ft.)	Min C (in.)	Min I (in. 4 in)
12	11.8	14.7	1.5	0.35	0.024
15	14.8	18.0	1.91	0.45	0.053
18	17.7	21.5	2.34	0.50	0.062
24	23.6	28.7	3.14	0.65	0.116
30	29.5	36.4	3.92	0.75	0.163
36	35.5	42.3	4.50	0.90	0.222
42	41.5	48.0	4.69	1.11	0.543
48	47.5	55.0	5.15	1.15	0.543

Acceptance of this material will be based on the manufacturer's certification of compliance with these specification requirements and the appearance of the manufacturer's name on the NYSDOT Approved List.

Basis of Payment	**Plain End Pipe Price Per Foot**	**Bell End Pipe Price Per Foot**	**Couplings per Each**
603.9812 M (12" diameter)	$_____	$_____	$_____
603.9815 M (15" diameter)	$_____	$_____	$_____
603.9818 M (18" diameter)	$_____	$_____	$_____
603.9824 M (24" diameter)	$_____	$_____	$_____
603.9830 M (30" diameter)	$_____	$_____	$_____
603.9836 M (36" diameter)	$_____	$_____	$_____
603.9842 M (42" diameter)	$_____	$_____	$_____
603.9848 M (48" diameter)	$_____	$_____	$_____

SECTION 603

CULVERTS AND STORM DRAINS (AS-MODIFIED)

This group of bid items shall be in accordance with Section 603 of the NYSDOT Standard Specifications with the following exceptions:

- The County will furnish and deliver the pipe and related items.
- Contractor shall unload and install all materials.
- Contractor's bid includes the cost of all necessary hoisting equipment to accomplish the work.
- Payment will be per lineal feet of pipe installed, not meters.

SECTION 603

PRICE

Item No.	Item	Pay Unit	
603.02xxM	Non-Reinforced Concrete Pipe	_____	/LF
603.05xxM	Corrugated Steel Pipe (68x13)	_____	/LF
603.06xxM	Corrugated Steel Pipe Paved Invert (68x13)	_____	/LF
603.07xxM	Corrugated Steel Pipe Fully Paved (68x13)	_____	/LF
603.08xxM	Corrugated Steel Pipe Arch (68x13)	_____	/LF
603.09xxM	Corrugated Steel Pipe Arch, Paved Invert (68x13)	_____	/LF
603.10xxM	Corrugated Steel Pipe Arch, Fully Paved (68x13)	_____	/LF
603.11xxM	Corrugated Steel Pipe (75x25) or (125x25)	_____	/LF
603.12xxM	Corrugated Steel Pipe Paved Invert (75x25) or (125x25)	_____	/LF
603.13xxM	Corrugated Steel Pipe Fully Paved (75x25) or (125x25)	_____	/LF
603.14xxM	Corrugated Steel Pipe Arch (75x25) or (125x25)	_____	/LF
603.15xxM	Corrugated Steel Pipe Arch Paved Invert (75x25) or (125x25)	_____	/LF
603.17xxyyM	Galvanized Steel End Sections Pipe (68x13)	_____	/EA
603.18xxM	Galvanized Steel End Sections Pipe Arch (68x13)	_____	/EA
603.20xxM	Galvanized Steel End Sections Pipe Arch (75x25) or (125x25)	_____	/EA
603.23xxM	Corrugated Structural Steel Pipe (1525-2745 Diam.)	_____	/LF
603.24xxM	Corrugated structural Steel Plate Pipe (2895-4115 Diam.)	_____	/LF
603.25xxM	Corrugated Structural Steel Plate Pipe (4265-5485 Diam.)	_____	/LF
603.26xxM	Corrugated Structural Steel Plate Pipe (5640-6400 Diam.)	_____	/LF
603.27xxM	Corrugated Structural Steel Plate Pipe PCC Paved Invert (1525-2745 Diam.)	_____	/LF
603.28xxM	Corrugated Structural Steel Plate Pipe PCC Paved Invert (2895-4115 Diam.)	_____	/LF
603.29xxM	Corrugated Structural Steel Plate Pipe PCC Paved Invert (4265-5485 Diam.)	_____	/LF
603.30xxM	Corrugated Structural Steel Plate Pipe PCC Paved Invert (5640-6400)	_____	/LF
603.31xxM	Corrugated Structural Steel Plate Pipe Arch (1780-6225 span, 9PI, Corner Plate)	_____	/LF
603.32xxM	Corrugated Structural Steel Plate Pipe Arch, PCC Paved Invert (1780-6225 span, 9PI, Corner Plate)	_____	/LF
603.35xxM	Corrugated Steel Plate Underpass	_____	/LF
603.40xxM	Round Corrugated Aluminum Pipe (68x13) (300-750 Diam.)	_____	/LF
603.41xxM	Round Corrugated Aluminum Pipe (75x25) (900-2400 Diam.)	_____	/LF
603.44xxM	Corrugated Aluminum Structural Plate Pipe (230x65) (1525-2895 Diam.)	_____	/LF

SECTION 603

PRICE (CONTINUED)

Item No.	Item	Pay Unit	
603.46xxM	Corrugated Aluminum Structural Plate Pipe (230x65) (3050-4570 Diam.)	_____	/LF
603.48xxM	Corrugated Aluminum Pipe-Arch (68x13) (430 Span, 330 Rise) to (1440 Span, 970 Rise) and (75x25) (1520 Span, 1170 Rise to 2400 Span, 1720 Rise)	_____	/LF
603.50xxM	Corrugated Aluminum Structural Plate Pipe-Arch (230x65) (1850 Span, 1500 Rise) to 3353 Span, 2160 Rise)	_____	/LF
603.52xxM	Corrugated Aluminum Structural Plate Pipe-Arch (230x65) (3734 Span, 2210 Rise to 5920 Span, 3630 Rise)	_____	/LF
603.53xxM	Corrugated Aluminum Pipe, Type IIR	_____	/LF
603.54xxM	Corrugated Aluminum End Sections Pipe	_____	/LF
603.55xxM	Corrugated Aluminum End Sections, Pipe Arch	_____	/LF
603.56xxM	Corrugated Steel Pipe-Type 1R	_____	/LF
603.58xxM	Corrugated Aluminum Pipe, Type 1R	_____	/LF
603.59xxM	Corrugated Steel Pipe-Type IIR	_____	/LF
603.60xxM	Reinforced Pipe Class III	_____	/LF
603.61xxM	Reinforced Concrete Pipe Class IV	_____	/LF
603.62xxM	Reinforced Concrete Pipe Class V	_____	/LF
603.66xxM	Reinforced Concrete Horizontal Elliptical Pipe Class HE II	_____	/LF
603.67xxM	Reinforced Concrete Horizontal Elliptical Pipe, Class HE II	_____	/LF
603.68xxM	Reinforced Concrete Horizontal Elliptical Pipe, Class HE IV	_____	/LF
603.69xxM	Reinforced Vertical Elliptical Pipe, Class VE IV	_____	/LF
603.70xxM	Reinforced Concrete Vertical Elliptical Pipe, Class VE V	_____	/LF
603.71xxM	Reinforced Concrete Vertical Elliptical Pipe, Class VE VI	_____	/LF
603.72xxM	Reinforced Concrete Cattle Pass	_____	/LF
603.73xxM	Reinforced Concrete Pipe End Sections	_____	/EA
603.74xxM	Reinforced Concrete Pipe Class II	_____	/LF
603.77 M	Concrete Collars	_____	/EA
603.80xxM	Corrugated Steel Pipe-Polymer Coated (68x13)	_____	/LF
603.81xxM	Corrugated Steel Pipe-Polymer Coated Paved Invert (68x13)	_____	/LF
603.82xxM	Corrugated Steel Pipe-Arch Polymer Coated (68x13)	_____	/LF
603.83xxM	Corrugated Steel Pipe-Arch Polymer Coated Paved Invert (68x13)	_____	/LF
603.84xxM	Corrugated Steel Pipe-Polymer Coated (75x25) or 125x25)	_____	/LF

SECTION 603

PRICE (CONTINUED)

Item No.	Item	Pay Unit	
603.85xxM	Corrugated Steel Pipe-Polymer Coated Paved Invert (75x25) or (125x25)	_____	/LF
603.86xxM	Corrugated steel Pipe-Arch Polymer Coated (75x25) or (125x25)	_____	/LF
603.87xxM	Corrugated Steel Pipe-Arch Polymer Coated Paved Invert (75x25) or (125x25)	_____	/LF
603.88xxM	Corrugated steel Pipe-Aluminum Coated (Type 2) (68x13)	_____	/LF
603.89xxM	Corrugated Steel Pipe--Arch Aluminum Coated (Type 2) (68x13)	_____	/LF
603.90xxM	Corrugated steel Pipe-Aluminum Coated (Type 2) (75x25) or (125x25)	_____	/LF
603.91xxM	Corrugated Steel Pipe--Arch Aluminum Coated (Type 2) (75x25) or (125x25)	_____	/LF
603.92xxM	Corrugated Steel Pipe-Aluminum Coated (Type 2) Type IR	_____	/LF
603.93xxM	Corrugated Steel Pipe-Arch Aluminum Coated (Type 2) Type IIR	_____	/LF
603.95xxM	Ductile Iron Pipe	_____	/LF
603.96xxM	Smooth Lined Corrugated Aluminum Pipe (68x13)	_____	/LF
603.97xxM	Smooth Lined Corrugated Aluminum Pipe (75x25)	_____	/LF
603.98xxM	Smooth Interior Corrugated Polyethylene Culvert and Storm Drain Pipe	_____	/LF
603.99xxM	Relaying Pipe	_____	/LF

Where xx equals the pipe diameter in inches

SECTION 603

PRECAST CONCRETE BOX CULVERT

This group of bid items shall be in accordance with the attached specification with the following exceptions:

The County will furnish and deliver the precast culvert sections and related materials.

The Contractor shall furnish and install waterproofing materials under Item 18595.53M Membrane Waterproofing System for Culverts.

The Contractor shall unload and install precast sections and all related materials.

The Contractor's bid includes the cost of all necessary hoisting equipment to accomplish the work.

Payment will be per lineal feet of culvert installed, not meters.

Payment items are:

15603.63xxyyM	Precast Concrete Box Culvert (fill height less than 0.6m)
15603.64xxyyM	Precast Concrete Box Culvert (fill height 0.6m or greater)
15603.65xxyyM	Precast Concrete Box Culvert (Bridge size, fill height less than 0.6m)
15603.66xxyyM	Precast Concrete Box Culvert (Bridge size, fill height 0.6m or greater)

ITEM 15603.63xxyy M - PRECAST CONCRETE BOX CULVERT (Fill Height Less Than 0.6 m)
ITEM 15603.64xxyyM - PRECAST CONCRETE BOX CULVERT (Fill Height 0.6 m or Greater)
ITEM 15603.65xxyy M - PRECAST CONCRETE BOX CULVERT (Bridge Size, Fill Height Less Than 0.6 m)
ITEM 15603.66xxyy M - PRECAST CONCRETE BOX CULVERT (Bridge Size, Fill Height 0.6 m or Greater)

1.0 DESCRIPTION

This work shall consist of furnishing and placing single or multi-cell precast reinforced concrete box culvert sections of the type indicated in the plans in accordance with these specifications in the locations indicated and in a manner approved by the Engineer.

2.0 MATERIALS

Precast concrete box culvert shall meet the requirements of Section 706-17 Precast Concrete Box Culverts.

3.0 CONSTRUCTION DETAILS

A. Inspection, Storage and Handling -

Precast box sections will be inspected at the construction site to determine any damage during shipment and for conformance to the dimensional tolerances. An additional inspection will be made prior to placement of precast box sections to determine any damage during storage.

B. Installation

1. Excavation

The requirements specified in Section 206 Trench, Culvert and Structure Excavation, that apply to culverts and storm drains shall govern, except as modified in the plans.

2. Placement

The precast manufacturer shall have a representative available to assist in the installation of the box culvert. Precast box sections shall be installed, true to line and grade, in accordance with the contract plans. Placement of the box sections shall start at the downstream end and proceed upstream, unless otherwise indicated in the contract plans.

3. Joints.

Precast box sections shall be installed with the female end upstream and the male joints fully entered therein. The joint openings between adjacent precast units shall not exceed 20 mm. The joints shall be sealed with a continuous gasket installed at the precast plant. Joints shall be drawn together with mechanical connectors, as shown on the approved working drawings. Culverts with a clear rise greater than 1.3 m shall have a minimum of four connectors per joint. Smaller culverts shall have a minimum of two connectors per joint. The number of mechanical connectors supplied shall be equal to the number of connectors required per joint multiplied by the number of joints unless otherwise approved by the Engineer. After installation, connectors may be left on or

removed at the contractor's option, unless otherwise noted in the contract plans. When the contract plans require, or the contractor chooses to leave the connectors in place, they shall be located so that they do not create an obstruction inside the culvert. Gaps which occur on the interior surfaces of the culvert due to misalignment or grade difference shall be filled as ordered by the Engineer, with an approved concrete repair material so as to produce a smooth continuous surface.

4. Backfilling.

The types of materials to be used in backfilling and the procedure of placement shall conform to the contract plans and the applicable provisions of Subsection 203-3.15.

4.0 METHOD OF MEASUREMENT

The quantity to be measured for concrete box culvert sections shall be the number of meters (laying length) furnished and installed in the work. Meters (laying length) shall be measured by multiplying the number of whole units by the nominal length of each unit and adding thereto to the length of any fractional units incorporated in the work. The nominal length of a unit or fractional unit shall be the inside measured length from one butting end to the other butting end measured along the bottom centerline of the unit.

5.0 BASIS OF PAYMENT

The quantity to be paid for shall be the number of meters of each size box culvert section incorporated in the work. The unit price bid shall include the cost of furnishing all labor, materials, equipment and installation supervision by the precast manufacturers representative, necessary to satisfactorily complete the work. The cost of furnishing and installing headwalls and cut off walls shall also be included in the unit price bid.

Payment shall be made under Item 15603.63xxyy M, 15603.64xxyy M, 15603.65xxyy M and 15603.66xxyy M, where xx and yy, as indicated in the itemized proposal shall mean the inside span and rise dimensions respectively in meters and tenths of a meter, of the precast section.

15603.63xxyyM Precast Concrete Box Culvert (fill height less than 0.6m)

$_____/Linear Ft.

15603.64xxyyM Precast Concrete Box Culvert (fill height 0.6m or greater)

$_____/Linear Ft.

15603.65xxyyM Precast Concrete Box Culvert (Bridge size, fill height less than 0.6m)

$_____/Linear Ft.

15603.66xxyyM Precast Concrete Box Culvert (Bridge size, fill height 0.6m or greater)

$_____/Linear Ft.

ITEM E603.9901xx- WEHOLITE PROFILE WALL POLYETHYLENE PIPE MODEL SPECIFICATION FOR CULVERT RELINE APPLICATIONS

1.0 INTENT

The intent of this specification is to specify the pipe material requirements for Weholite pipe to be used regardless of application.

2.0 REFERENCE SPECIFICATIONS

This specification references the following standard specifications, including ASTM, CSA, BNQ, which are made a part hereof by such reference and shall be the latest edition and revision.

ASTM D1248	Standard Specification for Polyethylene Plastics Extrusion Materials for Wire and Cable.
ASTM D2321	Standard Practice for Underground Installation of Applications.
ASTM D2412	Standard Test Method for Determination of Loading Characteristics of Plastic Pipe by Parallel Plate Loading.
ASTM F894	Specification for Polyethylene (PE) Large Diameter Profile Wall Sewer and Drain Pipe.
ASTM D3350	Specification for Polyethylene Plastics Pipe and Fittings Materials.
CAN/CSA B182.6	Profile Polyethylene Sewer Pipe and Fittings.
BNQ PP3624-120	Profile Polyethylene Pipe and Fittings. Smooth Inside Wall.

3.0 PIPE RAW MATERIAL REQUIREMENTS

3.1 The pipe shall be manufactured from a high density polyethylene material which meets or exceeds the minimum cell classification 345464C when classified in accordance with ASTM D3350

3.2 The raw material used to produce the pipe shall be a polyethylene compound qualified as Type III, Category 5, Class C, in accordance with ASTM D1248

3.3 The polyethylene raw material shall contain a minimum of 2%, well dispersed finely divided carbon black for UV stabilization. Additives which can be conclusively proven not to be detrimental to the pipe may also be used provided that the pipe produced meets or exceeds all of the requirements of this specification.

3.4 The pipe shall contain no recycled compound except that generated in the manufactures' own plant from resin of the same specification and from the same raw material supplier.

3.5 The pipe manufacturers' Quality System shall be certified by an appropriate independent body to meet the requirements of the ISO 9002 Quality Management Program.

3.6 Compliance with the requirements of Section 3 of this specification shall be certified in writing by the pipe supplier upon request.

3.7 The pipe material shall be resistant to corrosion from Hydrogen Sulfide and pH values between 2 and 13.

4.0 PIPE MANUFACTURING REQUIREMENTS

4.1 The pipe shall be manufactured with dimensions and tolerances in accordance with KWH Pipe internal manufacturing standard SQP-009. This standard meets the requirements of ASTM F894. The nominal inside diameter of the pipe shall be true to the specified pipe size. The pipe shall be manufactured by the continuous winding of a closed profile onto suitably sized mandrels. It shall be produced to constant internal diameters.

4.2 Lengths of pipe shall be manufactured with profile cut end treatments along the belix allowing for field extrusion welding.

4.3 The sections of pipe shall have Ring Stiffness Class 160 (160 LBS/FT) for 18", 21", 24",27",30" and Ring Stiffness Class 250 (250 LBS/FT) for 36", 40", 42", 48", 54", 60", 66", 72", 78", 84", 90", 96", 108", 120" as defined in ASTM F894.

4.4 The pipe shall be manufactured in such a manner that the pipe is available in lengths from 3-50 feet and can be delivered to the job site in order to accommodate installation, storage or varying ground conditions. Unless otherwise stated, the standard laying lengths shall be 25 or 50 feet. Each standard and random length of pipe in compliance with this standard shall be clearly marked with all required marking as per the applicable standard.

The pipe shall be homogenous throughout and free from visible cracks, holes, foreign inclusions or other injurious defects. The pipe shall be as uniform as commercially practical in color, opacity, density and other physical properties.

ITEM E603.9901xx - WEHOLITE PROFILE WALL POLYETHYLENE PIPE MODEL SPECIFICATION FOR CULVERT RELINE APPLICATIONS

Item Number	Pipe Size	Pick Up	Delivered
E603.990118	18	$	$
E603.990121	21	$	$
E603.990124	24	$	$
E603.990127	27	$	$
E603.990130	30	$	$
E603.990136	36	$	$
E603.990140	40	$	$
E603.990142	42	$	$
E603.990148	48	$	$
E603.990154	54	$	$
E603.990160	60	$	$
E603.990166	66	$	$
E603.990172	72	$	$
E603.990178	78	$	$
E603.990184	84	$	$
E603.990190	90	$	$
E603.9901108	108	$	$
E603.9901120	120	$	$

ITEM E603.9902xx - POLYETHYLENE PROFILE WALL PIPE LINER

The pipe shall have a smooth inside and smooth outside surface, inside diameter sized, hollow-wall closed profile, HDPE pipe. The pipe shall exhibit a pipe stiffness of 46 PSI at 5 percent deflection. The pipe joint must be physically interlocked in a manner to develop the tensile strength of the pipe; and to manage thermally induced seasonal contraction. It must be capable of being pushed (or jacked) into the host pipeline, and being pulled into the host pipeline without joint separation.

For direct burial, bedding, backfill, and general installation requirements, should comply with the specifications and guidelines of ASTM D-2321.

1.0 MATERIAL

The material from which the pipe is extruded shall be high density polyethylene "pipe grade" material listed by the Plastic Pipe Institute (PPI) as a PE 3408 resin; and exhibiting the physical properties described within the polyethylene material standard ASTM D-3350.

2.0 DIMENSIONS

Pipe sizes, inside diameters, and typical dimensions shall conform with those listed. The outside and inside diameter shall be hydraulically "smooth" and of a constant pipe dimension along the pipe segment length.

Nominal ID (in.)	Nominal OD (in.)	Nominal ID (in.)	Nominal OD (in.)
10.00	11.20	24.00	27.06
12.00	13.47	27.00	30.43
15.00	16.85	30.00	33.82
18.00	20.24	36.00	40.65
19.50	21.75	40.00	44.95
21.00	23.65	42.00	47.20
		48.00	53.80

3.0 MARKING

Each pipe segment shall be identified with the product name, pipe stiffness designation, and manufacturing data.

ITEM 603.9902xx - POLYETHYLENE PROFILE WALL PIPE LINER

PRICE QUOTED PER LINEAR FOOT

Item Number	Nominal Outside Diameter	Pick Up	Delivered
E603.990210	11.20 inch	$	$
E603.990212	13.47 inch	$	$
E603.990215	16.85 inch	$	$
E603.990218	20.24 inch	$	$
E603.990219	21.74 inch	$	$
E603.990221	23.65 inch	$	$
E603.990224	27.06 inch	$	$
E603.990227	30.43 inch	$	$
E603.990230	33.82 inch	$	$
E603.990236	40.65 inch	$	$
E603.990240	44.95 inch	$	$
E603.990242	47.20 inch	$	$
E603.990248	53.80 inch	$	$

SECTION 603

PVC (POLYVINYL CHLORIDE) GRAVITY SEWER PIPE AND FITTINGS

A. Pipe:

1. For pipe diameters 4' thru 15", the polyvinyl chloride (PVC) pipe shall be manufactured in accordance with the latest ASTM Specifications D-333 "Type PSP Poly (Vinyl Chloride) (PVC) Sewer Pipe and Fittings or ASTM Specification D-3034 "Type PSM Poly (Vinyl Chloride) (PVC) Sewer Pipe and Fittings". For pipe diameters 18" thru 27", the pipe manufacturer shall satisfy the requirements of the latest ASTM Specification F-679, Type I. All pipe shall be SDR-35 or thicker wall and the PVC Compound shall meet the requirements of the latest ASTM Specification D-1784. Pipe in compliance with these standards shall be clearly marked with pipe size (nominal), cell classification, SDR number, PVC Sewer Pipe, and ASTM Designation.

B. Joints

1. The joint shall provide a permanent seal against exfiltration or infiltration. The joining technique will be with elastomeric gasket.

2. Elastomeric Gasket Joints - The critical sealing dimensions of the bell, spigot, and gasket shall be in accordance with the manufacturer's standard dimensions and tolerances. The elastomeric compound shall comply in all respects with the physical requirements specified in ASTM F477-76. The gasket shall provide an adequate compressive force against the sealing surfaces of the bell and spigot so as to effect a positive seal under all combinations of the joint tolerances. The gasket shall be the only element depended upon to make the joint tolerances. The gasket shall be the only element depended upon to make the joint flexible and water tight. The gasket material shall be oil and gasoline resistant.

C. Fittings

1. All PVC wyes, tees and elbows shall be manufactured in classes suitable for the class of pipe as specified above.

D. Payment

1. All PVC pipe will be measured and paid by Linear Feet. All PVC pipe fittings will be paid by each. Payment will be made under the items on the following page.

FLEXIBLE SEWER LINE REPAIR COUPLINGS/DONUTS

A. Couplings

Shall be made of tough, elastomeric plastic, which shall provide strength while being resilient and unaffected by soil conditions. Couplings shall be resistant to chemicals and normal sewer gases. Couplings shall be leakproof, rootproof,and seal against infiltration and exfiltration. Couplings shall be fastened in place by the use of (2) #35 adjustable stainless steel clamps which can be installed with a screwdriver or a scoket wrench.

B. Donuts

Shall be elastomeric donut-shaped rings for compression sealing of sewer pipe joints, utilizing the bell end of an existing sewer pipe.

C. Payment

All couplings and donuts will be paid by each. Payment will be made under the items this page.

BID SHEET FOR PVC SEWER PIPE & FITTINGS

PVC PIPE - ASTM 3034
Item E603.9905xx (xx equals pipe diameter in inches)

Pipe Diameter	4"	6"	8"	10"	12"	15"	18"	21"
Price per 14' length								

PVC FITTINGS – ASTM 3034
Item E603.991nxx (n is from the table below, xx equals pipe diameter in inches)

n	Pipe Diameter	2"	3"	4"	6"	8"	10"	12"	15"	18"	21"
1	22 l/2"-street ell									xxx	xxx
2	22 l/2 bell-to-bell										
3	45 – street ell									xxx	xxx
4	45 – bell-to-bell									xxx	xxx
5	Wye									xxx	xxx
6	Wye x 6"									Xxx	xxx
7	6" Male X 4" Female Reducer: $										
8	6" Cast iron Threaded Cleanout Adaptor w/Brass Cleanout Cap: $										
-	Item E603.9920 Pipe Lubricant/Quart: $										

BID SHEET FOR SEWER LINE REPAIR COUPLINGS

Repair Couplings
Item E603.30nxx (n is from the table below, xx equals pipe diameter in inches)

n	Pipe Diameter	4"	6"	8"	10"	12"	15"	18"
1	PVC to Clay							
2	PVC to PVC							
3	PVC to ACP							
4	PVC to RCP							
5	Rubber Donuts for PVC to Clay Bell End							

ITEM E604.05XX – CATCH BASIN

Section 604 Drainage Structures

CATCH BASINS

Catch basins shall be as per the details on the following two pages.

E604.0501	24" SQ x 24" DP Precast Catch Basin	**$_____Per Each**
E604.0502	24" SQ x 36" DP Precast Catch Basin	**$_____Per Each**
E604.0503	24" SQ x 48" DP Precast Catch Basin	**$_____Per Each**
E604.0504	24" SQ X 54" DP Precast Catch Basin	**$_____Per Each**
E604.0505	24" SQ x 66" DP Precast Catch Basin	**$_____ Per Each**
E604.0506	24" SQ x 72" DP Precast Catch Basin	**$ _____ Per Each**
E604.0507	30" SQ x 36" DP Precast Catch Basin	**$ _____ Per Each**
E604.0508	30" SQ x 54" DP Precast Catch Basin	**$ _____ Per Each**
E604.0509	30" SQ x 66" DP Precast Catch Basin	**$ _____ Per Each**
E604.0510	30" SQ x 72" DP Precast Catch Basin	**$ _____ Per Each**
E604.0511	36" SQ x 42" DP Precast Catch Basin	**$ _____ Per Each**
E604.0512	36" SQ x 54" DP Precast Catch Basin	**$ _____ Per Each**

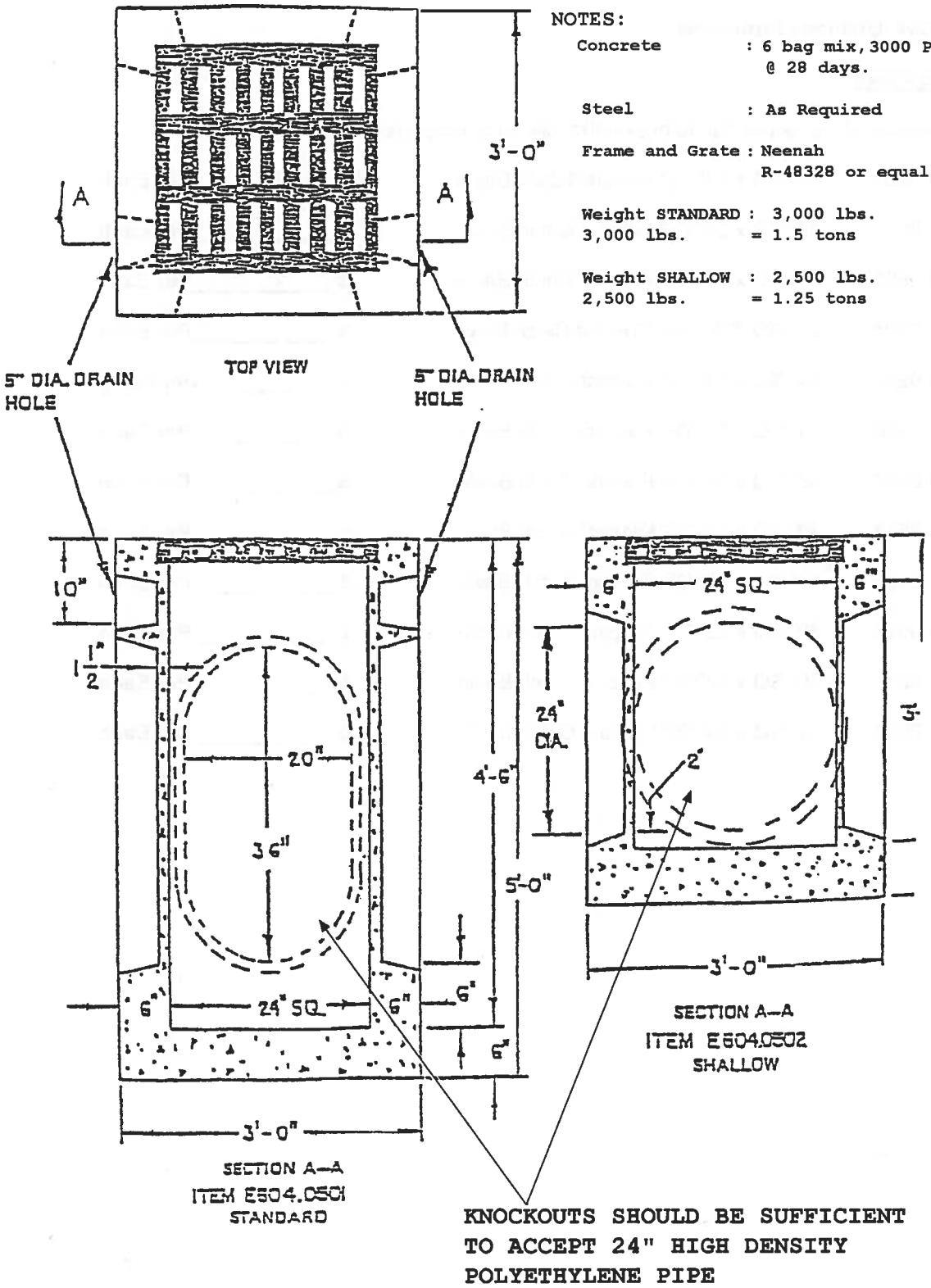

NOTES:

Concrete	: 6 bag mix, 3000 PSI @ 28 days.
Steel	: As Required
Frame and Grate	: Neenah R-48328 or equal
Weight STANDARD : 3,000 lbs. 3,000 lbs.	= 1.5 tons
Weight SHALLOW : 2,500 lbs. 2,500 lbs.	= 1.25 tons

KNOCKOUTS SHOULD BE SUFFICIENT TO ACCEPT 24" HIGH DENSITY POLYETHYLENE PIPE

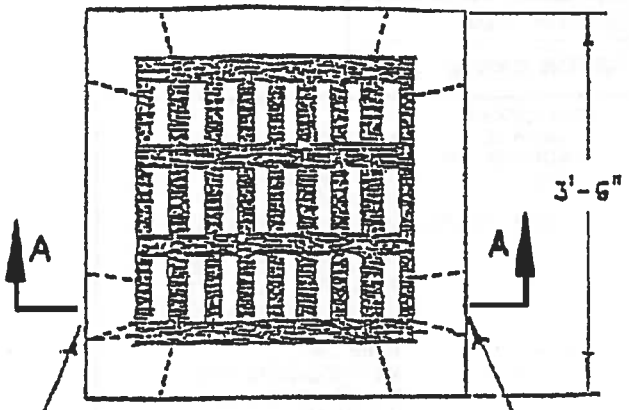

TOP VIEW

NOTES:

Concrete	: 6 bag mix, 3000 PSI @ 28 days.
Steel	: As Required
Frame and Grate	: Neenah R-48328 or equal
Weight STANDARD 3,000 lbs.	: 3,000 lbs. = 1.5 tons
Weight SHALLOW 2,500 lbs.	: 2,500 lbs. = 1.25 tons

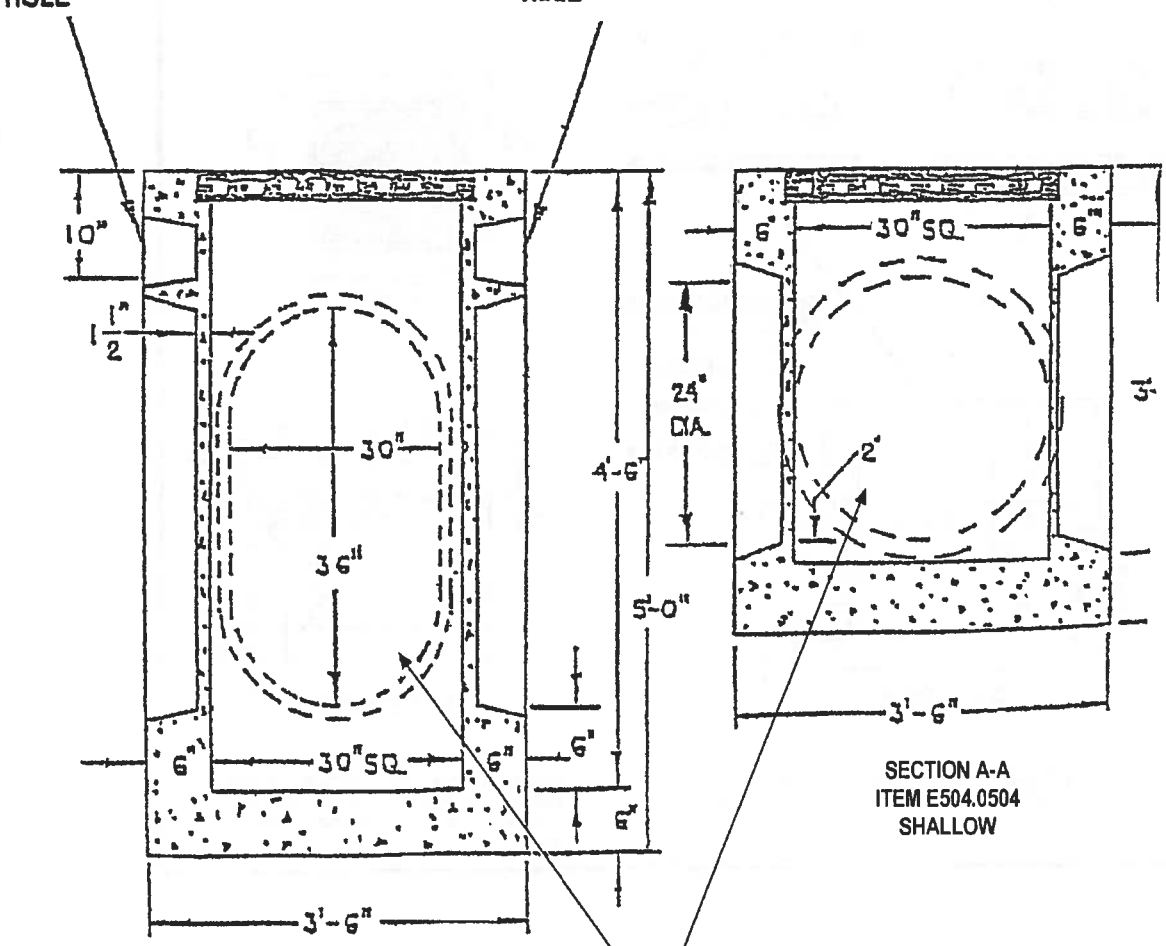

SECTION A-A
ITEM E504.0504
SHALLOW

SECTION A-A
ITEM E504.0503
STANDARD

KNOCKOUTS SHOULD BE SUFFICIENT TO ACCEPT 24" HIGH DENSITY POLYETHYLENE PIPE

PRODUCT DESIGNATION

24" SQ. X 24" CATCH BASIN

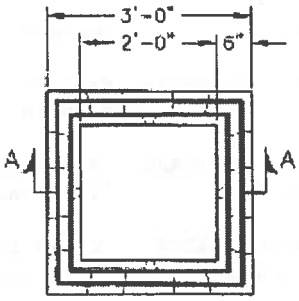

PLAN

SPECIFICATIONS:

CONCRETE:	4,000 PSI @ 28 DAYS
ENTRAINED AIR:	5%–9%
STEEL:	ASTM A496–A615 GRADE 60–60 KSI
DESIGN LOADING:	AASHTO HS–20–44 WITH 30% IMPACT AND EQUIVALENT SOIL PRESSURE OF 30 PCF. FLOATATION FORCES NOT ACCOUNTED FOR.
WEIGHT:	1,588 LBS.
KNOCKOUT:	ALL KNOCKOUTS HAVE 2" – 2 1/2" CONCRETE THICKNESS.
DRAIN HOLE:	ALL UNITS HAVE 1" DRAIN HOLES IN EACH KNOCKOUT. CONTRACTOR TO GROUT IF NOT REQUIRED.

RAISED FRAME & GRATE

- ☐ CONTRACTOR TO SUPPLY
- ☐ 2" HIGH STEEL FRAME FOR R48328 GRATE
- ☐ 4" HIGH STEEL FRAME FOR R48328 GRATE
- ☐ 6" CAP WITH FRAME CAST IN FLUSH FOR R48328 GRATE

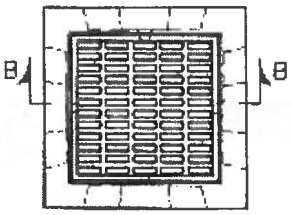

PLAN

BITUMASTIC COATING
(IF REQUIRED)

- ☐ INTERIOR
- ☐ EXTERIOR
- ☑ NONE REQ'D

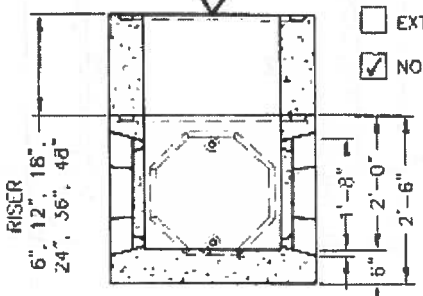

SECTION A-A

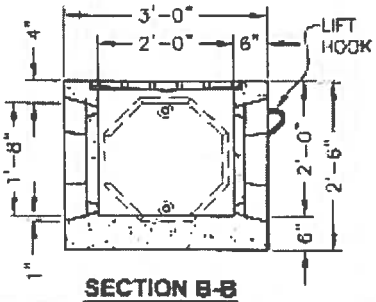

SECTION B-B

☐ **CODE: 315BSS** FRAME AND GRATE N CAP OR RAISED STYLE TO BE USED.

☑ **CODE: 316BSS** WITH NEENAH R48328 GRATE OR EQUAL – HS–20–44 LOADING BICYCLE PROOF CAST IN FLUSH

PRODUCT DESIGNATION

24" SQ. X 48" CATCH BASIN

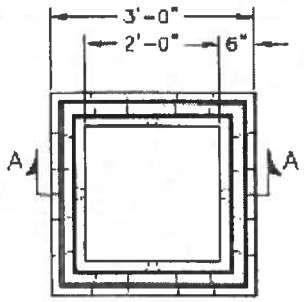

PLAN

SPECIFICATIONS:

CONCRETE:	4,000 PSI @ 28 DAYS
ENTRAINED AIR:	5%-9%
STEEL:	ASTM A496-A615 GRADE 60-60 KSI
DESIGN LOADING:	AASHTO HS-20-44 WITH 30% IMPACT AND EQUIVALENT SOIL PRESSURE OF 30 PCF. FLOATATION FORCES NOT ACCOUNTED FOR.
WEIGHT:	2564 LBS.
KNOCKOUT:	ALL KNOCKOUTS HAVE 2" - 2 1/2" CONCRETE THICKNESS.
DRAIN HOLE:	ALL UNITS HAVE 1" DRAIN HOLES IN EACH KNOCKOUT. CONTRACTOR TO GROUT IF NOT REQUIRED.

RAISED FRAME & GRATE

- ☐ CONTRACTOR TO SUPPLY
- ☐ 2" HIGH STEEL FRAME FOR R4832B GRATE
- ☐ 4" HIGH STEEL FRAME FOR R4832B GRATE
- ☐ 6" CAP WITH FRAME CAST IN FLUSH FOR R4832B GRATE

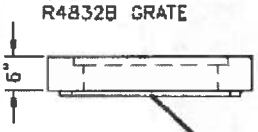

BITUMASTIC COATING
(IF REQUIRED)

- ☐ INTERIOR
- ☐ EXTERIOR
- ☑ NONE REQ'D

☐ RISER 6", 12", 18", 24", 36", 48"

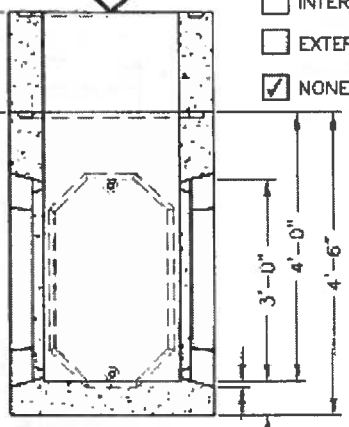

SECTION A-A

☐ **CODE: 315B-4** FRAME AND GRATE IN CAP OR RAISED STYLE TO BE USED.

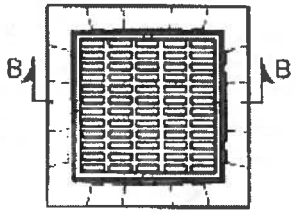

PLAN

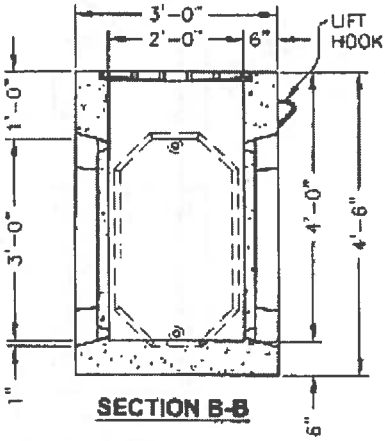

SECTION B-B

☑ **CODE: 316B-4** WITH NEENAH R4832B GRATE OR EQUAL - HS-20-44 LOADING BICYCLE PROOF CAST IN FLUSH

PRODUCT DESIGNATION

24" SQ. X 66" CATCH BASIN

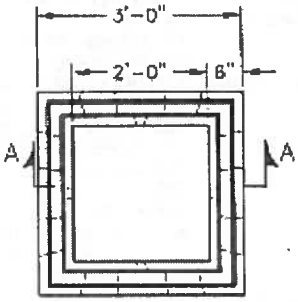

PLAN

SPECIFICATIONS:

CONCRETE:	4,000 PSI @ 28 DAYS
ENTRAINED AIR:	5%-9%
STEEL:	ASTM A496-A615 GRADE 60-60 KSI
DESIGN LOADING:	AASHTO HS-20-44 WITH 30% IMPACT AND EQUIVALENT SOIL PRESSURE OF 30 PCF. FLOATATION FORCES NOT ACCOUNTED FOR.
WEIGHT:	3282 LBS.
KNOCKOUT:	ALL KNOCKOUTS HAVE 2" - 2 1/2" CONCRETE THICKNESS.
DRAIN HOLE:	ALL UNITS HAVE 1" DRAIN HOLES IN EACH KNOCKOUT. CONTRACTOR TO GROUT IF NOT REQUIRED.

RAISED FRAME & GRATE

- [x] CONTRACTOR TO SUPPLY
- [ ] 2" HIGH STEEL FRAME FOR R4832B GRATE
- [ ] 4" HIGH STEEL FRAME FOR R4832B GRATE
- [ ] 6" CAP WITH FRAME CAST IN FLUSH FOR R4832B GRATE

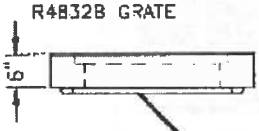

BITUMASTIC COATING
(IF REQUIRED)

- [ ] INTERIOR
- [ ] EXTERIOR
- [x] NONE REQ'D

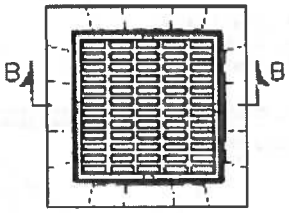

PLAN

- [ ] RISER 6", 12", 18", 24", 36", 48"

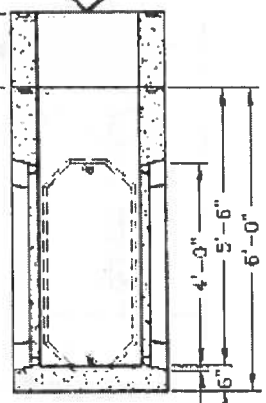

SECTION A-A

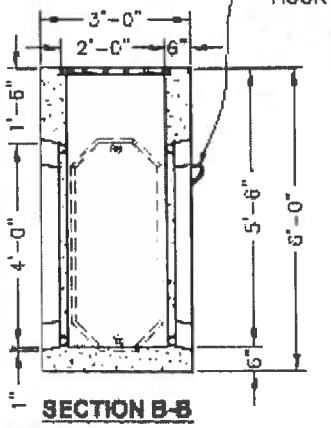

SECTION B-B

- [x] **CODE: 316BT** FRAME AND GRATE IN CAP OR RAISED STYLE TO BE USED.
- [ ] **CODE: 316BT** WITH NEENAH R4832B GRATE OR EQUAL - HS-20-44 LOADING BICYCLE PROOF CAST IN FLUSH

PRODUCT DESIGNATION

24" SQ. X 66" CATCH BASIN

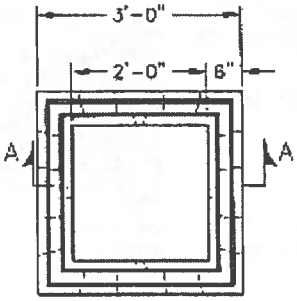

PLAN

SPECIFICATIONS:

CONCRETE:	4,000 PSI @ 28 DAYS
ENTRAINED AIR:	5%-9%
STEEL:	ASTM A496-A615 GRADE 60-60 KSI
DESIGN LOADING:	AASHTO HS-20-44 WITH 30% IMPACT AND EQUIVALENT SOIL PRESSURE OF 30 PCF. FLOATATION FORCES NOT ACCOUNTED FOR.
WEIGHT:	3282 LBS.
KNOCKOUT:	ALL KNOCKOUTS HAVE 2" - 2 1/2" CONCRETE THICKNESS.
DRAIN HOLE:	ALL UNITS HAVE 1" DRAIN HOLES IN EACH KNOCKOUT. CONTRACTOR TO GROUT IF NOT REQUIRED.

RAISED FRAME & GRATE

- [x] CONTRACTOR TO SUPPLY
- [ ] 2" HIGH STEEL FRAME FOR R4832B GRATE
- [ ] 4" HIGH STEEL FRAME FOR R4832B GRATE

- [ ] 6" CAP WITH FRAME CAST IN FLUSH FOR R4832B GRATE

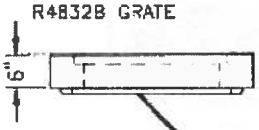

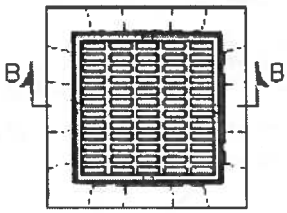

PLAN

BITUMASTIC COATING
(IF REQUIRED)

- [ ] INTERIOR
- [ ] EXTERIOR
- [x] NONE REQ'D

- [ ] RISER 6", 12", 18", 24", 36", 48"

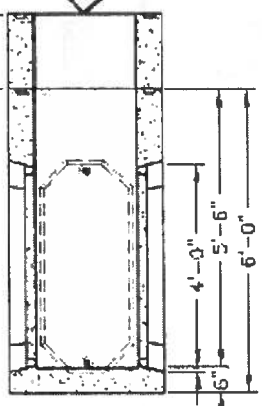

SECTION A-A

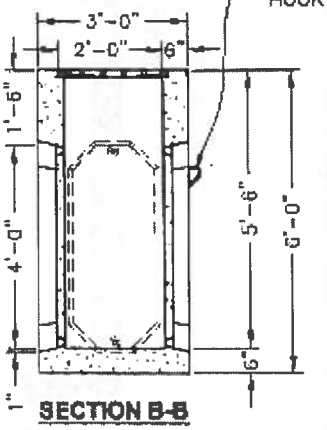

SECTION B-B

- [x] **CODE: 316BT** FRAME AND GRATE IN CAP OR RAISED STYLE TO BE USED.

- [ ] **CODE: 316BT** WITH NEENAH R4832B GRATE OR EQUAL - HS-20-44 LOADING BICYCLE PROOF CAST IN FLUSH

PRODUCT DESIGNATION

24" SQ. X 72" CATCH BASIN

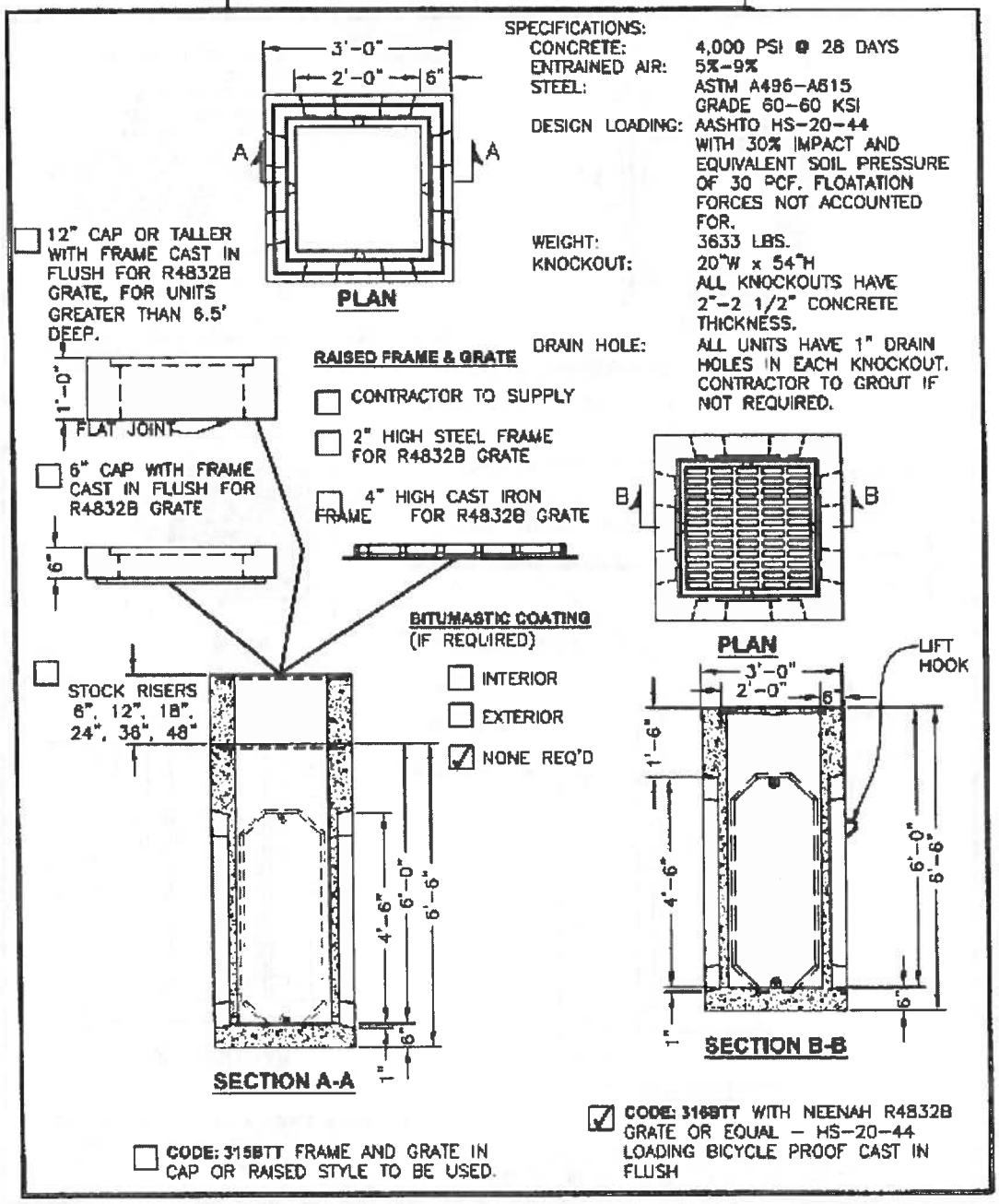

SPECIFICATIONS:

CONCRETE:	4,000 PSI @ 28 DAYS
ENTRAINED AIR:	5%-9%
STEEL:	ASTM A496-A615 GRADE 60-60 KSI
DESIGN LOADING:	AASHTO HS-20-44 WITH 30% IMPACT AND EQUIVALENT SOIL PRESSURE OF 30 PCF. FLOATATION FORCES NOT ACCOUNTED FOR.
WEIGHT:	3633 LBS.
KNOCKOUT:	20"W x 54"H ALL KNOCKOUTS HAVE 2"-2 1/2" CONCRETE THICKNESS.
DRAIN HOLE:	ALL UNITS HAVE 1" DRAIN HOLES IN EACH KNOCKOUT. CONTRACTOR TO GROUT IF NOT REQUIRED.

PRODUCT DESIGNATION

30" SQ. X 66" CATCH BASIN

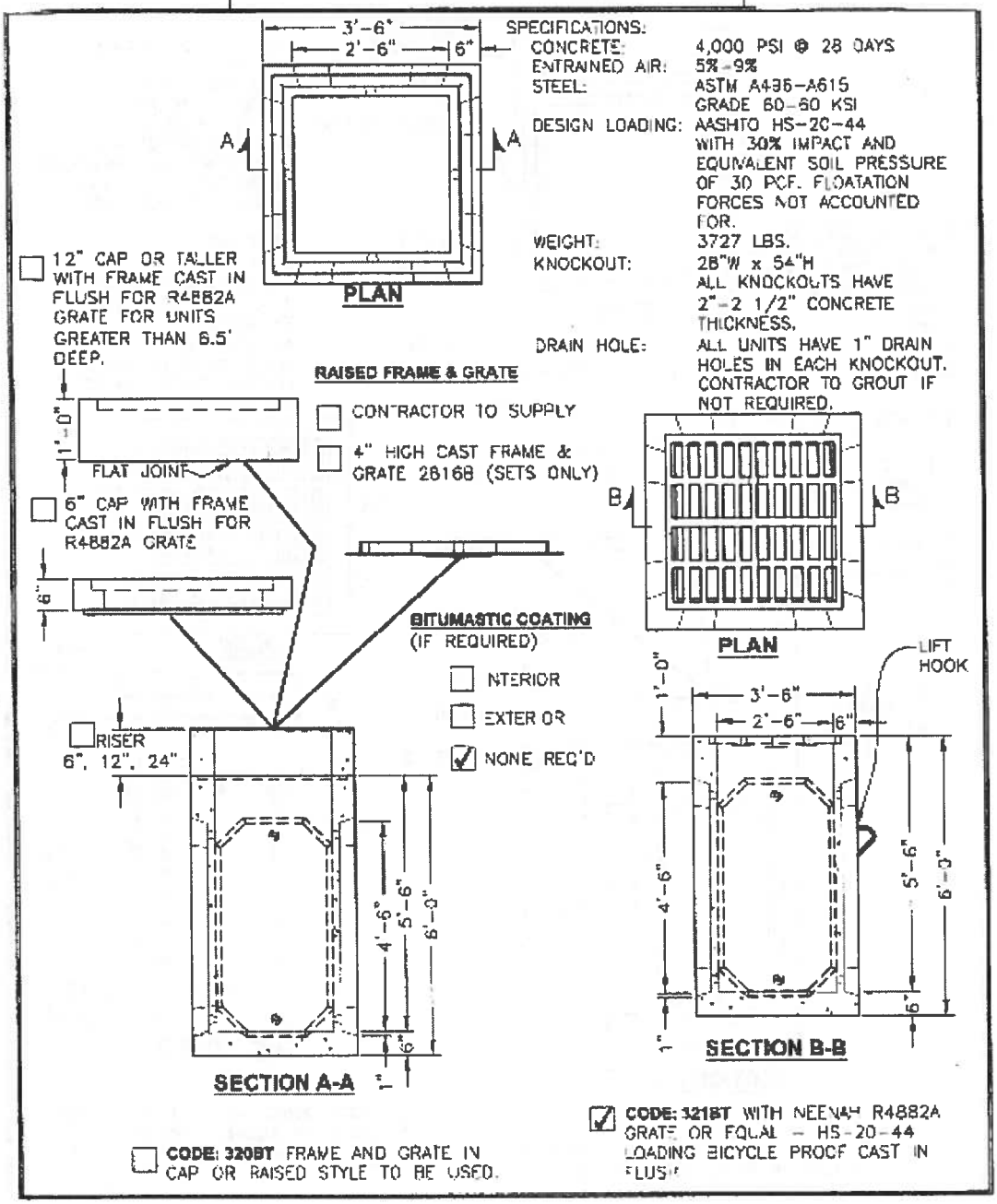

PRODUCT DESIGNATION

30" SQ. X 72" CATCH BASIN

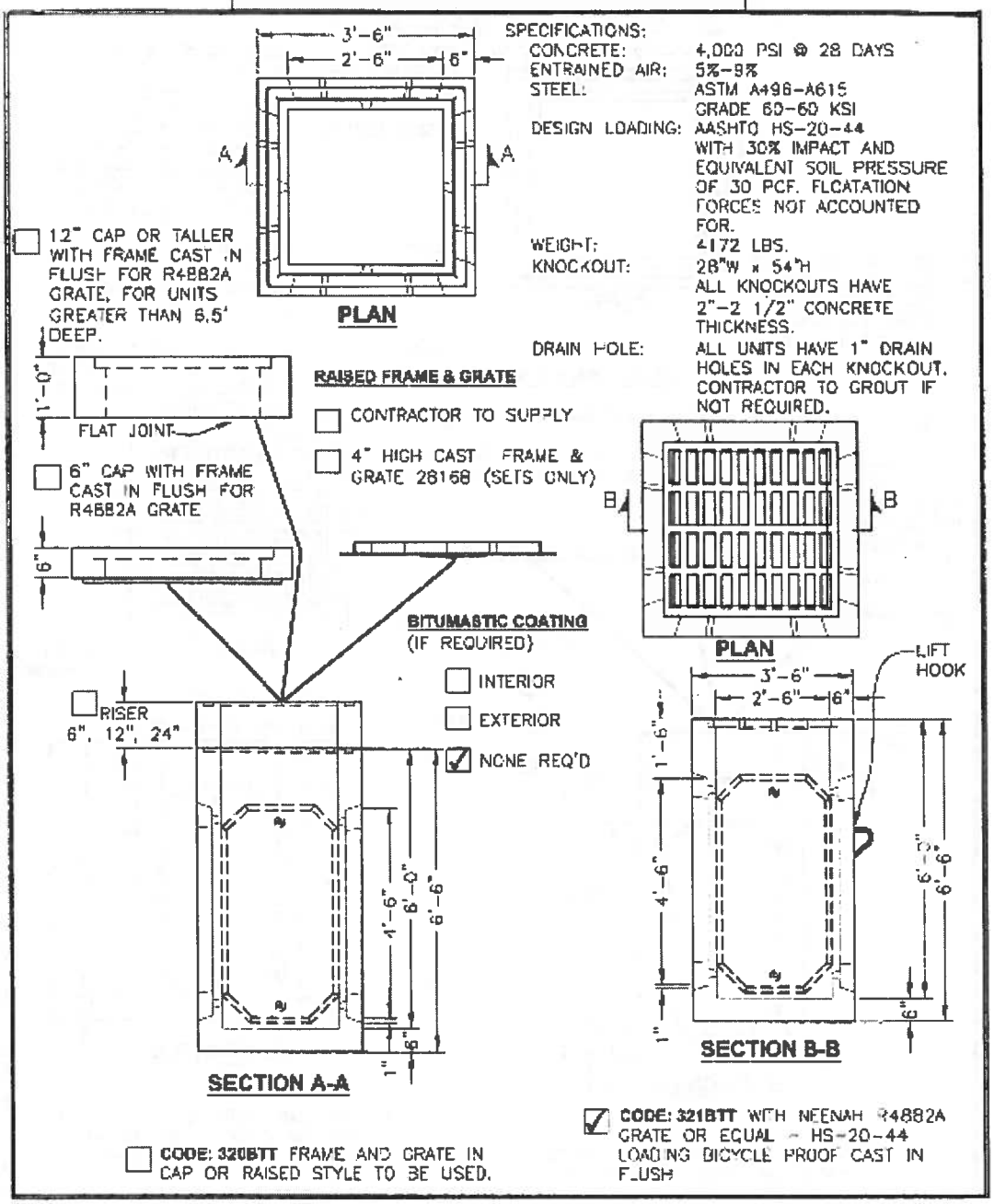

SPECIFICATIONS:

CONCRETE:	4,000 PSI @ 28 DAYS
ENTRAINED AIR:	5%-9%
STEEL:	ASTM A496-A615 GRADE 60-60 KSI
DESIGN LOADING:	AASHTO HS-20-44 WITH 30% IMPACT AND EQUIVALENT SOIL PRESSURE OF 30 PCF. FLOATATION FORCES NOT ACCOUNTED FOR.
WEIGHT:	4172 LBS.
KNOCKOUT:	28"W x 54"H ALL KNOCKOUTS HAVE 2"-2 1/2" CONCRETE THICKNESS.
DRAIN HOLE:	ALL UNITS HAVE 1" DRAIN HOLES IN EACH KNOCKOUT. CONTRACTOR TO GROUT IF NOT REQUIRED.

SECTION 604

ROUND, SQUARE AND RECTANGULAR ADJUSTING DEVICES

Price Each F.O.B. Erie County
nn is from the table below

nn	Rise	Item E604.07nn for 24" Dia. Manhole	Item E604.08nn for 13" x 18" Receiver Grate
01	1-1/4"	$	$
02	1-1/2"	$	$
03	1-3/4"	$	$
04	2"	$	$
05	2-1/4"	$	$
06	2-3/4"	$	$
07	3"	$	$
08	3-1/4"	$	$
09	3-1/2"	$	$
10	3-3/4"	$	$
11	4"	$	$
12	4-1/4"	$	$
13	4-1/2"	$	$
14	4-3/4"	$	$
15	5"	$	$

The above listed units are to be of semi-steel, seat machined so that the component parts will not rock when in place. They are to be for recess 1-1/2" deep.

SECTION 604

PRECAST CONCRETE MANHOLES AND RISER RINGS

A. Manhole Base:

Precast manhole bases shall be monolithic reinforced concrete, and shall comply with the latest ASTM Specification C-478 ***"Precast Reinforced Concrete Manhole Sections.***

The bottom floor of the monolithic precast base shall have a minimum thickness of eight (8) inches and shall project no less than six (6) inches beyond the outside the outside walls of he monolithic precast base to form a flange or annular footing intended to resist uplift.

The lowest edges of holes or cutouts for line and branch sewers shall be no less than six (6) inches above the inside surface of the floor or footing of the monolithic precast base.

No penetrating lifting holes will be allowed.

B. Manhole Barrel, Cone, Reducer, and Flat Top

All precast concrete manholes, barrels, and reducers shall be constructed in accordance with the latest ASTM Specification C-478 "***Precast Reinforced Concrete Manhole Sections***", with the following exceptions: The manhole barrel walls shall be five (5) inches thick for a four (4) foot diameter manhole, six (6) inches thick for a five (5 foot diameter manhole, and seven (7) inches thick for a six (6) foot diameter manhole. The upper section of the precast manhole shall be an eccentric cone design having either a 24" diameter inside or a 32" inside diameter top opening with an 8" (width) top bearing surface.

Precast cones shall have a minimum height of two feet, six inches (2'6") and a maximum height of four (4)feet.

Flat Top slabs shall be a minimum of eight (8) inches thick and shall be capable of supporting a HS-25 loading. The flat top slab shall have either a 24" diameter inside or a 32" inside diameter top opening with and 8" (width) top bearing surface.

No penetrating lifting holes will be allowed.

C. Joints

The manhole barrel and cone joints shall concrete with a confined o-ring, neoprene gasket in accordance with ASTM Specification C-443.

D. Manhole Steps

Manhole steps shall be forged aluminum or steel reinforced co-polymer polypropylene, and shall be placed in the forms while the manhole sections are being cast or securely grouted in place after casting, and shall be in accordance with Erie County Department of Environment & Planning, Division of Sewerage Management Standard Detail 17 as shown on the next page.

E. Manhole Inlet/Outlet:

All manhole penetrations for connection of inlet or outlet branch sewers shall be either machine cut or cast in place.

STANDARD MANHOLE STEP

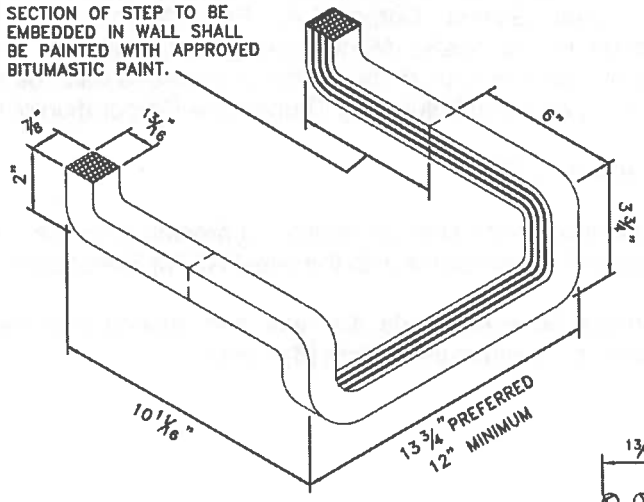

(DROP FRONT TYPE)

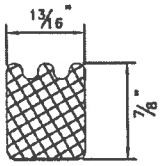

TYPICAL SECTION

NOTES:

1. MANHOLE STEPS SHALL BE OF FORGED ALUMINUM ALLOY.
2. AN ACCEPTABLE ALTERNATE IS THE STEEL REINFORCED COPOLYMER POLYPROPYLENE MANHOLE STEP.
3. THE STEPS SHALL BE EMBEDDED IN THE WALLS OF THE CONCRETE PIPE BARREL WHILE THE PIPE IS BEING CAST OR SECURELY GROUTED IN PLACE AFTER CASTING.

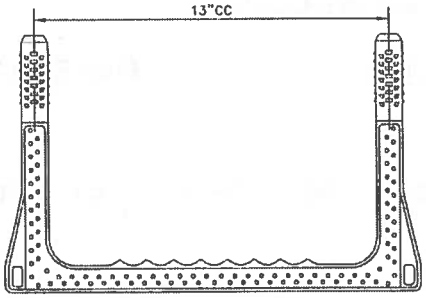

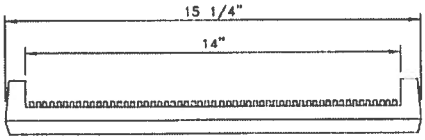

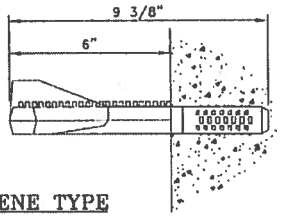

REINFORCED COPOLYMER POLYPROPYLENE TYPE

ERIE COUNTY **DEPT. OF ENVIRONMENT & PLANNING** **DIVISION OF SEWERAGE MANAGEMENT**	**Rev. 1** 12/9/96	ADDED REINFORCED COLPOLYMER TYPE STEP	**STD.DETAIL**
	Rev. 2		17
	File: d-17	**Date: 3/1/91**	

At each point where a sewer line or branch sewer is to be connected to the monolithic precast bases or manhole barrels, a seal assembly shall be supplied to seal the annular space between the pipe and hole. This seal assembly shall consist of rubber gaskets or links which can be mechanically compressed to form watertight barriers. Such sealing assemblies shall be: RESSEAL consisting of rubber gasket, cast iron compression flange, *"Press-Wedge I"* gasket or *"Watertight Pipe to Manhole rubber Boot Assembly"* stainless steel band clamps as manufactured by Press Seal Gasket Corporation, Fort Wayne, Indiana; Cor-Ten-ten bolt assembly manufactured by the scales Manufacturing Corporation of Newburgh, New York; LINK-SEAL consisting of solid synthetic rubber links connected to each other with heavy, elongated washers, bolts and nuts, as manufactured by Thunderline Corporation of Wayne, Michigan, or equal.

F. Manhole Adjusting Rings

Manhole adjusting rings shall be reinforced precast concrete, using 4000 PSI concrete, and shall be constructed in accordance with the latest ASTM Specification C-478.

The difference between inside diameter and outside diameter of the adjusting rings (bearing surface) shall be a minimum of eight (8) inches.

Payment will be made under the following items:

Prefabricated Adjustment Rings for Manholes as required in Item 604.10M *NEW YORK STATE SPECIFICATIONS* DATED MAY 1, 2008 and all addenda.

F.0.B. ERIE COUNTY Item 604.10M Price Each $_____

NOTE: Additional items can be found on the following pages

BID SHEET FOR PRECAST CONCRETE

For all tables n or nn can be found in the left hand column

ITEM E604.10nxx MANHOLE ADJUSTING RINGS									
n	Ring Height	1"	2'	3"	4"	5"	6"	1/2" Taper	2/3" Taper
1	24" Inside Dia. X 40" Outside Diameter								
2	36" Inside Dia. X 52" Outside Diameter								

Where XX = height in inches

ITEM E604.40nnx CONCRETE MANHOLE BASES					
nn	Base Height	2'	3'	4'	5'
48	48" inside diameter				
60	60" inside diameter				
72	72" inside diameter				

Where X = base height in feet

ITEM E604.41nnx BARREL SECTIONS					
nn	Barrell Height	1'	2'	3'	4'
48	48" inside diameter				
60	60" inside diameter				
72	72" inside diameter				

Where X= base height in feet

ITEM E604.42nxx TOP SECTIONS				
n	Top Section Diameter	48" Diameter	60" Diameter	72" Diameter
1	1' Flat Top			
2	2' Flat Top			
3	3' Concentric Cone			
4	4' Concentric Cone			
5	Manhole "O" Rings			

Where XX = diameter in inches

ITEM E604.43xx PIPE OUTLETS **Price per outlet, including cost of boot & installation**

Where XX = pipe diameter in inches

8" $_____ 10" $_____ 12" $_____ 15"$_____

SECTION 605 UNDERDRAINS

CORRUGATED STEEL PIPE – TYPE III

All pipe will meet the NYSDOT Standard Specification Section 605 as indicated by the Item No.

Price bid per linear foot of various size corrugated pipe to include connecting bands and bolts will be as follows:

1. For Round Corrugated Pipe

   A. 6" to 54" pipe, additional 1 foot (12") of pipe per bid price per foot.

   B. 60" and over additional 2 feet (24") of pipe as per bid price per foot.

Pipe specified as Polymer coated shall also meet the following requirements:

Corrugated steel pipe and pipe arches shall be precoated with P.V.C. plastiscol paint as per AASHTO M-246. Fabrication of the pipe and pipe arch shall be as per AASHTO M-245 and shall have 10 mils of coating on the interior of the pipe and 3 mils on the exterior (AASHTO M-246 Type B).

All Pipe Prices per linear foot will include F.0.B. any point in Erie County.

SECTIONS 605 UNDERDRAINS

CORRUGATED STEEL PIPE – TYPE III

Diameter	Gauge	605.07xxM Plain – Type HI Galvainzed L.F.	E605.07xx Polymer Coated L.F.
6"	18	$	$
6"	16	$	$
12"	16	$	$
15"	16	$	$
18"	16	$	$
21"	16	$	$
24"	14	$	$
30"	14	$	$
36"	14	$	$
42"	12	$	$
48"	12	$	$
54"	12	$	$
60"	16	$	$
66"	10	$	$
72"	10	$	$
78"	8	$	$
84"	8	$	$
96"	8	$	$
102"	8	$	$
108"	8	$	$
120"	8	$	$

Where xx equals the pipe diameter in inches.

SECTION 605

CORRUGATED POLYETHYLENE UNDERDRAIN PIPE

All pipe will meet the requirements of New York State Department of Transportation Standard Specifications, where applicable and AASHTO Designation: **M252 or M294 Type C** or as established by Erie County Department of Public Works.

MATERIALS

The corrugated polyethylene underdrain shall conform to heavy duty requirements of AASHTO Designation **M252** or **M294 Type C Corrugated Polyethylene Drainage Tubing** except as follows:

1. The underdrain shall have slotted or knifed perforations uniformly spaced along the length and circumference. the slots shall be cleanly cut with no extraneous materials, strings, or webs remaining in the perforations.

2. The minimum pipe stiffness at 5% and 10% deflection at 23° ± 2°C (73 ± 4 F) shall be 35 lbs./in/in and 30 lbs./in/in, respectively.

3. Screw, split snap or alternate type fittings as approved by the Engineer, shall be used.

4. ASTM Designation D1248 Class B pipe shall also be acceptable.

Acceptance of this material will be based on the manufacturers certification of compliance with these specification requirements and the appearance of the manufacturers name on the NYSDOT approved list.

Basis of Payment:		Price Per Foot	Couplings per Each
605.1501M	(4" diameter)	$	$
605.1502M	(6" diameter)	$	$
605.1503M	(8" diameter)	$	$
605.1504M	(10" diameter)	$	$
18605.981012M	(12" diameter)	$	$
18605.981015M	(15" diameter)	$	$
18605.981018M	(18" diameter)	$	$
18605.981024M	(24" diameter)	$	$
18605.981030M	(30" diameter)	$	$
18605.981036M	(36" diameter)	$	$
18605.981042M	(42" diameter)	$	$
18605.981048M	(48" diameter)	$	$
18605.981054M	(54" diameter)	$	$
18605.981060M	(60" diameter)	$	$
18605.981063M	(63" diameter)	$	$

SECTION 606

GUIDE RAILING

Contractors are advised to bid on all guide rail and related items including but not limited to Guide Rail Removal, Windrow excavation and disposal and paving of mowing strips. Determination of low bidder for a particular guide rail project shall be made with consideration of all work items involved. Items containing the prefix E are special Erie County items. Items containing the suffix U are used guide rail materials, which may be proposed for use by the Contractor subject to the approval of the County.

Note: The Contractor's attention is directed to Section 587 of these bid items for the following two items: Item 587.1002M-BOX BEAM BRIDGE RAIL, TWO RAIL (furnished & Installed) (Various Locations in Erie County, and Item 587.1002M - BOX BEAM BRIDGE RAIL, TWO RAIL (Furnished Only).

Item E203.99 Windrow Excavation and Removal: Under this item the Contractor shall remove windrows up to 2 feet high and regrade shoulders to a uniform grade and slope, A.O.B.E., Disposal of excavated materials shall be offsite; the County will make its maintenance facilities available for disposal. Payment will be made per square yard graded.

Windrow Excavation & Removal **$_____/Sq.Yd. Graded**

Item E606.9901 Guide Rail Removal: Under this item the Contractor shall remove and dispose of guide rail and posts of all types. Payment will be made per lineal foot of rail removed.

Guiderail Removal **$_____/Linear Foot**

Item E619.9901 Maintenance and Protection of Traffic for Guide Rail Operations: Under this item the Contractor shall maintain and protect traffic from the time operations begin until the new guide rail installation is complete and accepted. Signs, lights, barrels and barricades shall be furnished installed, moved and removed as required. Payment will be made per lineal foot of guide rail installation.

Maintenance & Protection of Traffic **$_____/Linear Foot**

Item E608.0201 Asphalt Concrete Mowing Strips: Under this item the Contractor shall furnish and install 2 inches of Type 3 Fine Binder 3 feet wide centered under the proposed guide rail. Binder will be placed on a prepared earth subgrade. Removal of topsoil and grading of the earth subgrade is included in this item. Payment will be made per ton installed.

Asphalt Concrete Mowing Strips **$_____/Ton**

SECTION 606

GUIDE RAIL

The NYSDOT Standard Specifications and Standard Sheets for Section 606 shall apply except as amended herein.

ITEM 606.10M - BOX BEAM GUIDE RAILING (Furnished & Installed) (Various Locations in Erie County)

606.10M	$ _____	Per Linear Ft.
606.10UM	$ _____	Per Linear Ft.

ITEM 606.10M - BOX BEAM GUIDE RAILING (FURNISHED ONLY)

The requirements for this Item are the same as 606.10 but less installation. The unit price bid shall be per linear foot based upon 6' post spacing, with payment as specified on Table 606-2 of the New York State Specifications to include all costs of furnishing and delivering the material to any point in Erie County.

606.10M	$ _____	Per Linear Ft.
606.10UM	$ _____	Per Linear Ft.

ITEM 606.100001M - BOX BEAM GUIDE RAILING SHOP CURVED (Furnished & Installed) (Various Locations In Erie County)

606.100001M	$ _____	Per Linear Ft.
606.100001UM	$ _____	Per Linear Ft.

ITEM 606.100001M - BOX BEAM GUIDE RAILING SHOP CURVED (FURNISHED ONLY)

The requirements for this Item are the same as 606.100001, but less installation. The unit price bid shall be per linear foot based upon 6' post spacing, with payment as specified on Table 606.2 of the New York State Specifications to include all costs of furnishing and delivering the material to any point in Erie County.

606.100001M	$ _____	Per Linear Ft.
606.100001UM	$ _____	Per Linear Ft.

ITEM 606.1201M - BOX BEAM GUIDE RAILING END ASSEMBLY - TYPE I - (Furnished & Installed) (Various Locations In Erie County)

606.1201M	$ _____	Per Each
606.1201UM	$ _____	Per Each

ITEM 606.1201M - BOX BEAM GUIDE RAILING END ASSEMBLY - TYPE I -(FURNISHED ONLY)

The requirements for this Item are the same as 606.1201M, but less installation. The unit price bid shall be per unit including all costs of furnishing and delivering material to any point in Erie County.

606.1201M	$ _____	Per Each
606.1201UM	$ _____	Per Each

ITEM 606.1202M - BOX BEAM GUIDE RAILING END-ASSEMBLY TYPE II (Furnished & installed) (Various Locations in Erie County)

606.1202M	$ _____	Per Each
606.1202UM	$ _____	Per Each

ITEM 606.1202M - BOX BEAM GUIDE RAILING END ASSEMBLY - TYPE II (Furnished Only)

The requirements for this item are the same as 606.1202M but less installation. The unit price bid shall be per unit including all costs of furnishing and delivering material to any point in Erie County.

606.1202M	$ _____	Per Each
606.1202UM	$ _____	Per Each

ITEM 606.16M - CORRUGATED BEAM GUIDE RAILING (Furnished & Installed) (Various Locations In Erie County)

Bid Price/Foot Including Posts and Hardware for a 12'-6" post spacing. If the post spacing is not 12'-6" then the payment factors in Table 606-2 will apply.

Quantity (L.F.)	Item 606.16M – Corrugated Beam Guide Railing	
1' - 100'	$ _____	Per Linear Ft.
101' - 500'	$ _____	Per Linear Ft.
501' - 1000'	$ _____	Per Linear Ft.
1001' - 5000'	$ _____	Per Linear Ft.

Bid Price/Foot Including Posts and Hardware for a 12'-6" post spacing. If the post spacing is not 12'-6" then the payment factors in Table 606-2 will apply.

Quantity (L.F.)	Item 606.16UM – Corrugated Beam Guide Railing	
1' - 100'	$ _____	Per Linear Ft.
101' - 500'	$ _____	Per Linear Ft.
501' - 1000'	$ _____	Per Linear Ft.
1001' - 5000'	$ _____	Per Linear Ft.

ITEM 606.16M - CORRUGATED BEAM GUIDE RAILING (FURNISHED ONLY)

The unit price bid shall be per linear foot for the railing including all costs of furnishing and delivering the material to any point in Erie County.

606.16M	$ _____	Per Linear Ft.
606.16UM	$ _____	Per Linear Ft.

ITEM 606.4805M – I-BEAM POSTS FOR EXISTING CORRUGATED BEAM GUIDE RAILING (FURNISHED ONLY)

The unit price bid shall be per each for guide posts (Metal S3 x 5.7, length 5' 3") including accessory hardware such as nuts, bolts and washers necessary for assembly to railing and including all costs of furnishing and delivering the material to any point within Erie County.

606.4805M	$ _____	Per Each
606.4805UM	$ _____	Per Each

ITEM E606.480501 – I-BEAM POST INSTALLATIONS FOR CORRUGATED BEAM GUIDE RAILING (NO RAILING OR POST INCLUDED)

The unit price bid shall be per each S3 x 5.7, length 5'3" post at a specific job site installed within 30 days of order date.

E606.480501	$ _____	Per Each

ITEM E606.480502 – I-BEAM POST INSTALLATIONS FOR CORRUGATED BEAM GUIDE RAILING (Post Only Included)

The unit price bid shall be per each S3 x 5.7, length 5'3" post at a specific job site furnished and installed within 30 days of order date.

E606.480502	$ _____	Per Each

ITEM E606.9901 - CHANNEL BACK UP FOR CORRUGATED BEAM GUIDE RAIL (Furnished & Installed) (Various Locations in Erie County)

Channel material shall consist of C9X20 members or an approved equal.

E606.9901	$ _____	Per Linear Ft.
E606.9901U	$ _____	Per Linear Ft.

ITEM E606.9902 - ATTACHMENTS FOR HEAVY POST BLOCKED-OUT CORRUGATED BEAM WITH BACK UP (Furnished & Installed) (Various Locations in Erie County)

Attachments shall be furnished and installed to fasten Heavy Post Blocked-Out Corrugated Beam with Channel to Bridge Railing. Attachments are for the plate girder stiffeners, the Bridge Railing, or the truss members.

E606.9902	$ _____	Per Each
E606.9902U	$ _____	Per Each

ITEM 606.22M - ANCHORAGE UNITS FOR CORRUGATED BEAM GUIDE RAILING (Furnished & Installed) (Various Locations in Erie County)

606.22M	$ _____	Per Each
606.22UM	$ _____	Per Each

ITEM 606.23M - ANCHORAGE UNITS FOR CORRUGATED BEAM GUIDE RAILING (Driveway) (Furnished & Installed) (Various Locations in Erie County)

606.23M	$ _____	Per Each
606.23UM	$ _____	Per Each

ITEM 606.32M - HEAVY POST BLOCKED-OUT CORRUGATED BEAM GUIDE RAILING (Furnished & Installed) (Various Locations in Erie County)

New York State Standard Sheest M606-8R3 and M606-9R2 shall apply

Bid Price/Foot Including Posts and Hardware for a 6'-3" post spacing. If the post spacing is not 6'-3" then the payment factors in Table 606-2 will apply.

Quantity (L.F.)	Item 606.32M – Heavy Post Blocked-Out Corrugated Beam Guide Railing	
1' - 100'	$ _____	Per Linear Ft.
101' - 500'	$ _____	Per Linear Ft.
501' - 1000'	$ _____	Per Linear Ft.
1001' - 5000'	$ _____	Per Linear Ft.

Bid Price/Foot Including Posts and Hardware for a 6'-3" post spacing. If the post spacing is not 6'-3" then the payment factors in Table 606-2 will apply.

Quantity (L.F.)	Item 606.32UM – Heavy Post Blocked-Out Corrugated Beam Guide Railing	
1' - 100'	$ _____	Per Linear Ft.
101' - 500'	$ _____	Per Linear Ft.
501' - 1000'	$ _____	Per Linear Ft.
1001' - 5000'	$ _____	Per Linear Ft.

ITEM E606.4817 – I-BEAM POSTS AND BLOCK-OUT FOR HEAVY POST BLOCKED-OUT CORRUGATED BEAM GUIDE RAILING (Furnished & Installed)

The requirements for this item are the same as 606.32 without furnishing or installing the Corrugated Beam and shall apply to each Heavy Blocked-Out Post installed.

E606.4817	$ _____	Per Each
E606.4817U	$ _____	Per Each

ITEM E606.9903 - BRIDGE POST MODIFICATION - HEAVY POST BLOCKED-OUT CORRUGATED BEAM GUIDE RAILING (Furnished & Installed) (Various Locations in Erie County)

Refer to the attached detail on page 42

E606.9903	$ _____	Per Each
E606.9903U	$ _____	Per Each

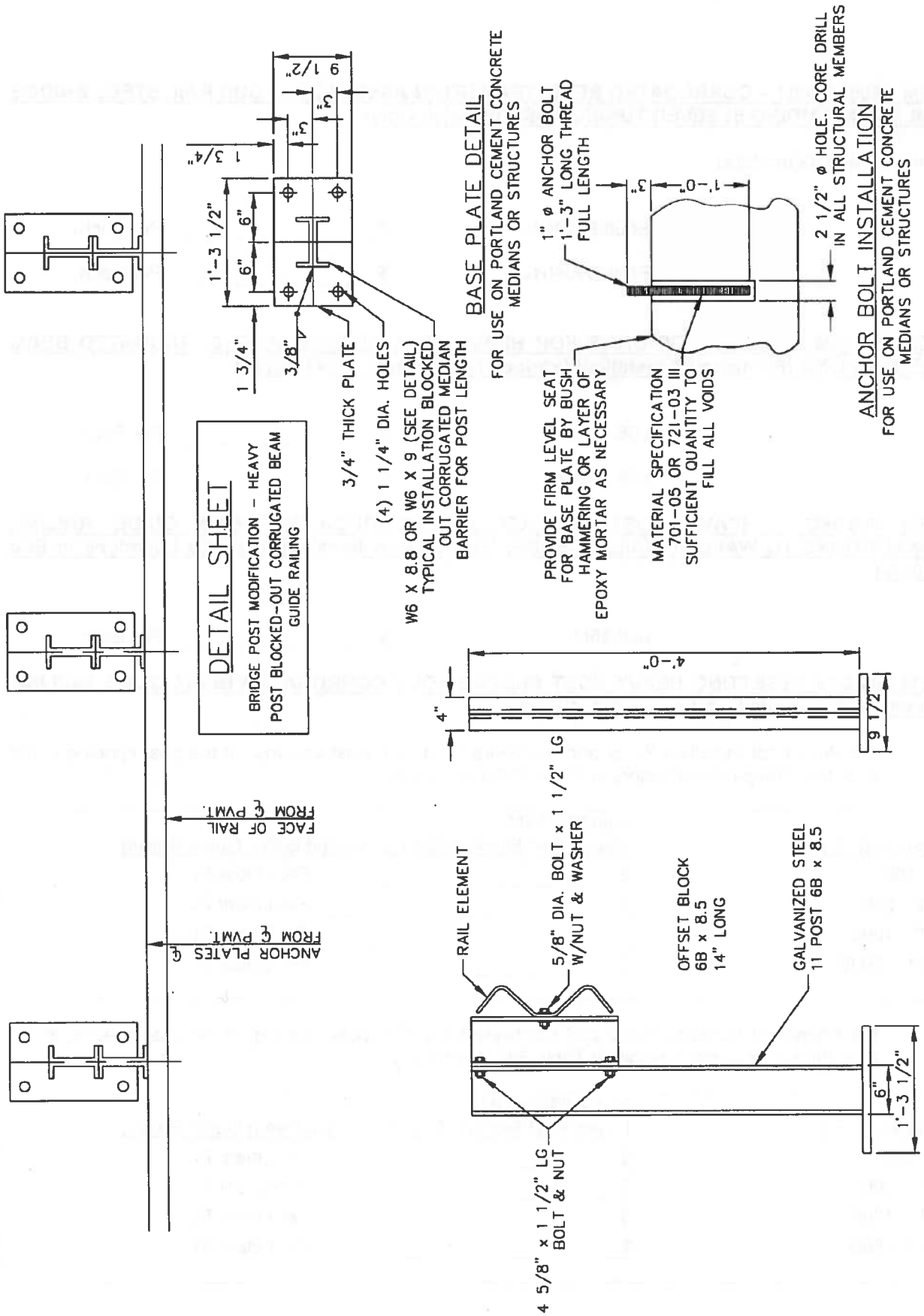

E606.9903 - BRIDGE POST MODIFICATION - HEAVY POST BLOCKED-OUT CORRUGATED BEAM GUIDE RAILING

ITEM E606.990401 – CORRUGATED BEAM TRANSITION ASSEMBLY - FOUR RAIL STEEL BRIDGE RAILING INCLUDING SLEEVED TUNING FORK (Furnish Only)

Refer to Page 43 for detail

E606.990401	$ _____	Per Each
E606.990401U	$ _____	Per Each

ITEM 606.34M - ANCHORAGE UNITS FOR HEAVY POST BLOCKED-OUT CORRUGATED BEAM GUIDE RAILING (Furnished & Installed) (Various Locations in Erie County)

606.34M	$ _____	Per Each
606.34UM	$ _____	Per Each

ITEM 606.36M - HEAVY POST BLOCKED-OUT CORRUGATED BEAM GUIDE RAILING CONNECTIONS TO WALLS (TRAILING ENDS) (Furnished & Installed) (Various Locations in Erie County)

606.36M	$ _____	Per Each

ITEM 606.55M RESETTING HEAVY POST BLOCKED-OUT CORRUGATED BEAM GUIDE RAILING (Resetting at Various Locations in Erie County)

Bid Price/Foot Including Posts and Hardware for a 6'-3" post spacing. If the post spacing is not 6'-3" then the payment factors in Table 606-2 will apply.

Quantity (L.F.)	Item 606.55M – Heavy Post Blocked-Out Corrugated Beam Guide Railing	
1' - 100'	$ _____	Per Linear Ft.
101' - 500'	$ _____	Per Linear Ft.
501' - 1000'	$ _____	Per Linear Ft.
1001' - 5000'	$ _____	Per Linear Ft.

Bid Price/Foot Including Posts and Hardware for a 6'-3" post spacing. If the post spacing is not 6'-3" then the payment factors in Table 606-2 will apply.

Quantity (L.F.)	Item E606.55UM – Heavy Post Blocked-Out Corrugated Beam Guide Railing	
1' - 100'	$ _____	Per Linear Ft.
101' - 500'	$ _____	Per Linear Ft.
501' - 1000'	$ _____	Per Linear Ft.
1001' - 5000'	$ _____	Per Linear Ft.

ITEM 606.5148M - RESETTING CORRUGATED BEAM GUIDE RAILING (NEW POSTS) (Furnished & Installed) (Various Locations in Erie County)

Bid Price/Foot Including Posts and Hardware for a 12'-6" post spacing. If the post spacing is not 12'-6" then the payment factors in Table 606-2 will apply.

Quantity (L.F.)	Item 606.5148M – Resetting Corrugated Beam Guide Railing (New Posts)	
1' - 100'	$ _____	Per Linear Ft.
101' - 500'	$ _____	Per Linear Ft.
501' - 1000'	$ _____	Per Linear Ft.
1001' - 5000'	$ _____	Per Linear Ft.

Bid Price/Foot Including Posts and Hardware for a 12'-6" post spacing. If the post spacing is not 12'-6" then the payment factors in Table 606-2 will apply.

Quantity (L.F.)	Item 606.5148UM – Resetting Corrugated Beam Guide Railing (New Posts)	
1' - 100'	$ _____	Per Linear Ft.
101' - 500'	$ _____	Per Linear Ft.
501' - 1000'	$ _____	Per Linear Ft.
1001' - 5000'	$ _____	Per Linear Ft.

ITEM E606.55 RESETTING CORRUGATED BEAM GUIDE RAILING (Heavy Posts & Block-Outs furnished by others) (Resetting at Various Locations in Erie County)

Bid Price/Foot Including Heavy Posts, Block-Outs and Hardware

Quantity (L.F.)	Item E606.55 – Resetting Corrugated Beam Guide Railing (New HPBO Posts Furnished by Others)	
1' - 100'	$ _____	Per Linear Ft.
101' - 500'	$ _____	Per Linear Ft.
501' - 1000'	$ _____	Per Linear Ft.
1001' - 5000'	$ _____	Per Linear Ft.

Bid Price/Foot Including Heavy Posts, Block-Outs and Hardware

Quantity (L.F.)	Item E606.55U – Resetting Corrugated Beam Guide Railing (New HPBO Posts Furnished by Others)	
1' - 100'	$ _____	Per Linear Ft.
101' - 500'	$ _____	Per Linear Ft.
501' - 1000'	$ _____	Per Linear Ft.
1001' - 5000'	$ _____	Per Linear Ft.

ITEM 606.5910M - RESETTING ANCHORAGE UNITS FOR CORRUGATED BEAM GUIDE RAILING OR MEDIAN BARRIER (Various Location in Erie County)

606.5910M	$ _____	Per Each
606.5910UM	$ _____	Per Each

ITEM E606.47 - GUIDE POSTS (WOOD)

As required in Section 710-13 of the New York State Standard Specifications.

E606.47	6" x 8" x 5'-4"	$ _____	Per Each F.O.B. Erie County

NOTE:

The final award for the Guide Railing will be based on those bids that provide the lowest cost for total assembled unit. Should one firm's bid for end assemblies, for example, be higher but the railing bid lower, resulting in the lowest total cost, that firm may receive the bid for both items, as a total assembled unit.

All guide rail items listed herein are intended to be used for repair at various locations or installations at one or more locations on road reconstruction projects twelve months of the year. Contact the Erie County Highway Division with any questions regarding materials or detail.

ITEM 608.0101 – PORTLAND CEMENT CONCRETE SIDEWALKS & DRIVEWAY'S

Description:

All specifications as shown in Section 608 New York State Standard Specifications dated May 1, 2008 and all addenda shall apply, except excavation and foundation course shall be completed by others. Erie County Standard sheet – EC 93-2 (available at the Erie County DPW Div. Highways 95 Franklin Street, Buffalo, NY 14202) shall be referenced for this work.

Cost per cubic yard delivered to the following Maintenance Districts:

Clarence District	Item 608.0101M	**$_____Per C.Y.**
Harlem District	Item 608.0101M	**$_____Per C.Y.**
Hamburg District	Item 608.0101M	**$_____Per C.Y.**
East Aurora District	Item 608.0101M	**$_____Per C.Y.**
East Concord District	Item 608.0101M	**$_____Per C.Y.**

SECTIONS 609 CURB AND CURB AND GUTTER

All specifications as shown in Section 609 New York State Standard Specifications dated May 1, 2008 and all addenda shall apply except as modified herein.

Concrete Curb Type BB:

Section 609-1 through 609-5 of the New York State Standard Specifications dated May 1, 2008 and all addenda shall apply. Three hundred (300) linear feet minimum per job site. Refer to drawing on page 49

E609.03 Concrete Curb Type BB **$_____Per linear foot**

Concrete Curb and Gutter Type BB:

Section 609-1 through 609-5 of the New York State Standard Specifications dated May 1, 2008 and all addenda shall apply. Two hundred (200) linear feet minimum per job site. Refer to drawing on page 51

E609.05 Concrete curb and Gutter Type BB **$_____Per linear foot**

Concrete Curb Repair:

As modified by detail sheet on page 50

E609.25 Concrete Curb Repair **$_____Per linear foot**

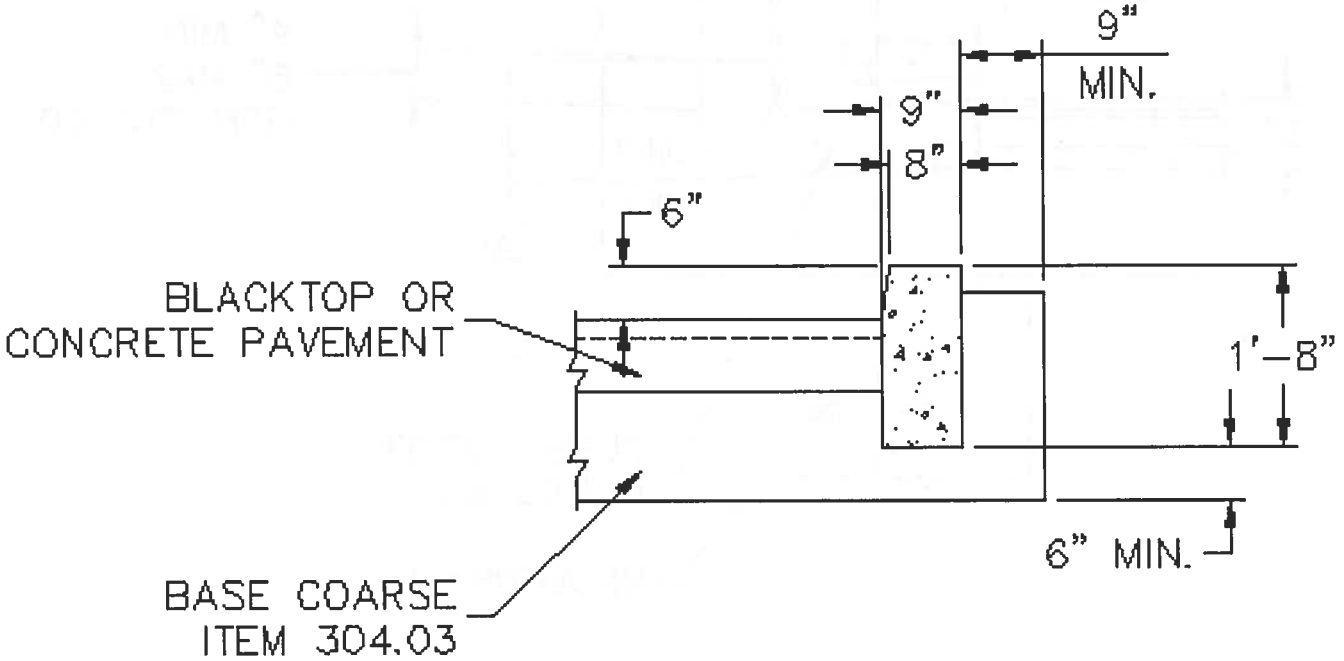

CONCRETE CURB
TYPE "BB"
NOT TO SCALE

ITEM E609.03 CONCRETE CURB TYPE BB

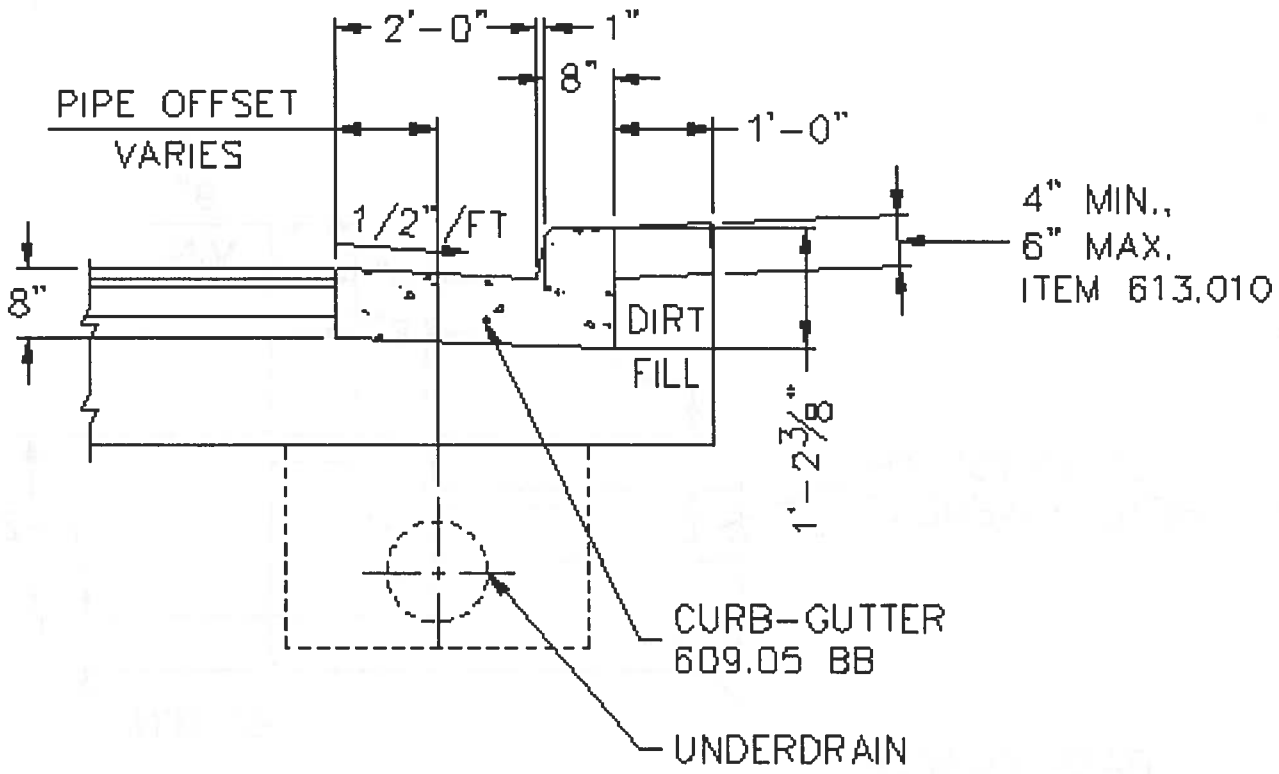

ITEM E609.05 CONCRETE CURB AND GUTTER TYPE BB

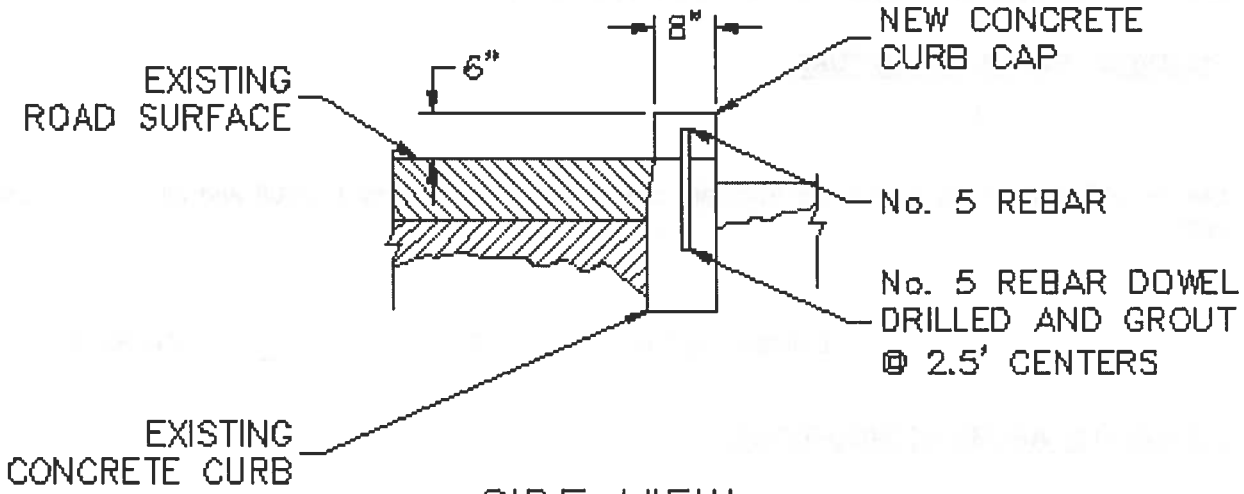

SIDE VIEW
NOT TO SCALE

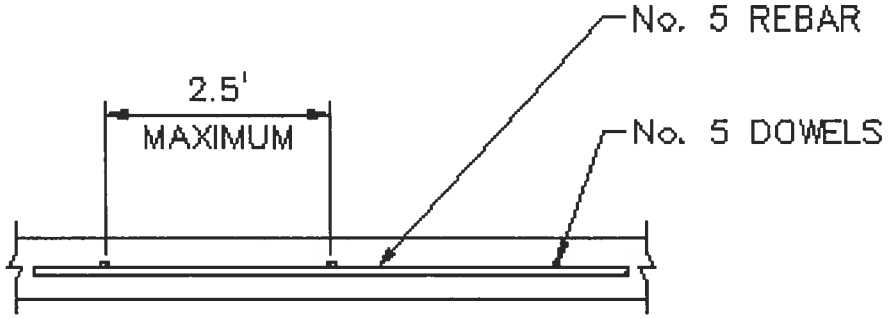

TOP VIEW
NOT TO SCALE

THE UNIT PRICE BID PER LINEAR FOOT SHALL INCLUDE THE COST OF ALL LABOR, MATERIALS AND EQUIPMENT NECESSARY TO PERFORM THE WORK TO THE SATISFACTION OF THE ENGINEER, EXCEPT EXISTING CONCRETE CURB CAP TO BE REMOVED BY OTHERS.

ITEM E609.25 - CONCRETE CURB REPAIR

SECTION 610
SECTION 610 TURF AND WILDFLOWER ESTABLISHEMENT

610.0203M - ESTABLISHING TURF

Section 610 of the New York State Standard Specifications dated May 1, 2008 and all addenda shall apply.

Establishing Turf $ _____ Per Sq. Yd.

610.03M - ESTABLISHING WILDFLOWERS

Section 610 of the New York State Standard Specifications dated May 1, 2008 and all addenda shall apply.

Establishing Wildflowers $ _____ Per Sq. Yd.

SECTION 610

ROADSIDE MOWING

DESCRIPTION

The Contractor shall provide all labor, equipment and material necessary to mow that area adjacent to the edge of pavement; the limit of this work area to be established by the Engineer.

2.0 DETAILS

Roadside vegetation to be cut to a height not greater than 5 inches. Mowing may require work over guiderail, along ditch slopes, road shoulder and other areas depending on topography.

Equipment shall consist of but not be limited to tractor mounted "Brush-Hog" with rear or side extended booms and/or tractor side mounted "Sickle-Bar" type mowers.

Operations shall continue and be repeated, if necessary, until results are acceptable to the Engineer.

All equipment and methods to be used shall be approved by the Engineer prior to the start of work.

The Contractor is required to provide the Engineer with a schedule of locations to be mowed.

All equipment on all tractor/mowers shall be in full compliance with the latest edition of the New York State Vehicle and Traffic Law and shall be equipped with all necessary warning lights, a combination of rotary lights and strobes mounted front and rear of the machine. All warning lights shall be visible from both the front and rear of each machine.

The Contractor must provide adequate support equipment which shall include a two-way radio or mobile phone equipped supervisory and service vehicle. Tractor/mower cabs shall also be equipped with two-way radios or mobile phones.

3.0 METHOD OF MEASUREMENT

The quantity to be measured shall be the number of miles of roadway mowed including adjacent areas that are mowed. Measurement shall be made along edge of pavement.

4.0 BASIS OF PAYMENT

The unit price bid shall include the cost of all labor, materials and equipment necessary to complete the work.

Item E610.04 Mowing $_____per Mile

SECTION 613 TOPSOIL

ITEM E613.02nn - FURNISHING OF TOPSOIL

Supplier of topsoil shall meet the requirements of Sub-section 713-01 topsoil.

Method of Measurement: Topsoil shall be measured in either cubic yards or tons. Delivery will be by truck load from plant or pit to job site.

Basis of Payment: The unit price bid for topsoil shall include the cost of furnishing all equipment, labor or material to load the topsoil into trucks (either Erie County trucks or others).

The unit price bid for delivery of topsoil shall include the cost of supplying all equipment, labor and material to end dump topsoil at a location designated by Erie County.

E613.0201 Topsoil	$ _____	Per Cubic Yard
E613.0202 Topsoil	$ _____	Per Ton

A.

Delivery of topsoil per truck load
$ _____ per 10 mile increment or less

OR

B.

Delivery of topsoil per truck load:

0-10 Miles	10-20 Miles	20-30 Miles	Over 30 Miles
$ _____	$ _____	$ _____	$ _____

SECTION 614 CARE, THINNING AND REMOVAL OF TREES

ITEM 614.03xx – TREE REMOVAL

Section 614 of the New York State Standard Specifications dated May 1, 2008 and all addenda shall apply for items shown below.

Payment will be made under:

Item No.	Item	Pay Unit	
614.0332M	Tree Removal (over 12" to 18" D.B.H.)	$ _____	EA.
614.0342M	Tree Removal (over 18" to 24" D.B.H.)	$ _____	EA.
614.0352M	Tree Removal (over 24" to 36" D.B.H.)	$ _____	EA.
614.0362M	Tree Removal (over 36" to 48" D.B.H.)	$ _____	EA.
614.0372M	Tree Removal (over 48" to 60" D.B.H.)	$ _____	EA.
614.0382M	Tree Removal (over 60" to 72" D.B.H.) (*STUMP CUT FLUSH - FOR ALL THE ABOVE*)	$ _____	EA.

Item No.	Item	Pay Unit	
614.0334M	Tree Removal (over 12" to 18" D.B.H.)	$ _____	EA.
614.0344M	Tree Removal (over 18" to 24" D.B.H.)	$ _____	EA.
614.0354M	Tree Removal (over 24" to 36" D.B.H.)	$ _____	EA.
614.0364M	Tree Removal (over 36" to 48" D.B.H.)	$ _____	EA.
614.0374M	Tree Removal (over 48" to 60" D.B.H.)	$ _____	EA.
614.0384M	Tree Removal (over 60" to 72" D.B.H.) (*STUMP GRUBBED - FOR ALL THE ABOVE*)	$ _____	EA.
E614.0393	Removal of Existing Stumps by Grinding	$ _____	HR

ITEM E614.02xx - TREE TOPPING

NYSDOT Standard Specifications Section 614 shall apply except as herein amended.

614-1 Description: This work shall consist of tree topping.

614-1.02 Tree Topping: The work shall consist of topping and limbing as directed by the Engineer.

614.3.02 Tree Topping: All trees to be topped and limbed will be designated by the Engineer. The tree shall be cut to a height of two feet below all power, telephone and cable T.V. lines.

The Contractor will make available an aerial bucket, two (2) qualified tree climbers and related equipment necessary to satisfactorily complete the work.

The County shall provide all traffic control.

All wood, brush, and other debris resulting from the work shall be disposed of by County of Erie, Division of Highway Personnel.

Liability: The contractor shall protect and shall be liable for injuries to all plants, curbs, pavements, structures, utility lines and other features on the Highway right of way and adjacent property. Replacement and restoration shall be as approved by the Engineer.

614-4 - METHOD OF MEASUREMENT

614-4.02 Tree Topping: Tree topping shall be measured by the number of hours spent to satisfactorily complete the work.

614-5 - BASIS OF PAYMENT

614-5.02 Tree Topping: Payment for work will be based on the unit price bid, which payment shall constitute full compensation for all labor, materials, equipment and incidentals necessary to complete the work as specified.

Payment will be made under:

Item No.	Item	Pay Unit	
E614.0201	Tree Topping	$ _____	HR
E614.0202	Tree Trimming and Brush Chipping	$ _____	HR

SECTION 615 LANDSCAPE MISCELLANEOUS

WEED CONTROL MAT

1.0 SCOPE

This is a materials specification covering root control barrier in trenches, alongside hardscape structures such as sidewalks, curbing, pavements, concrete and building foundations to prevent structural damage due to root penetration. The product functions to provide both a physical and chemical barrier zone to restrict vegetative root encroachment.

This is a material purchasing specification and design review of its use is recommended.

2.0 REFERENCED DOCUMENTS

ASTM Standards

D-5261 Test Method for Measuring Mass per Unit Area of Geotextiles
D-4632 Test Method for Grab Breaking Load and Elongation of Geotextiles
D-4833 Test Method for Index Puncture Resistance of Geotextiles, Geomembranes and Related Products
D-4533 Test Method for Trapezoid Tear Strength of Geotextiles
D-4491 Test Method for Water Permeability of Geotextiles by Permittivity
D-4751 Test Method for Determining the Apparent Opening Size of a Geotextile
D-4355 Test Method for Deterioration of Geotextiles from Exposure to Ultraviolet Light and Water (Xenon-Are Type Apparatus)

*EPA Standards (Reference EPA Label)
Registration No 59823-1 (Attached Exhibit B)

EPA CG 1500 Water Solubility
EPA CG 1600 Vapor Pressure

3.0 PHYSICAL AND CHEMICAL REQUIREMENTS

3.1 Fibers used in the manufacture of root control barrier substrate fabric shall consist of long chain synthetic polyolefins (at least 95% by weight) and a UV stabilizer. They shall be formed into a stable network such that the filaments or yarns retain their dimensional stability relative to each other.

3.2 Nodules consisting of trifluralin, carbon black and polyethylene compounded in a patented method utilizing time released characteristics are permanently attached to the substitute fabric on 1-1/2" centers by a through injection molding process.

3.3 All substrate property values, with the exception of apparent opening size (AOS), in these specifications represent minimum average roll values (MARV) in the weakest principal direction (i.e., average test results of any roll in a lot sampled for conformance or quality assurance testing shall meet or exceed the minimum values provided herein). Values for AOS represent maximum average roll values.

3.4 Property values for the trifluralin are average run values.

4.0 CERTIFICATION

4.1 The manufacturer shall provide to the Engineer a certificate stating the name, product name, style number, chemical composition and other pertinent information to fully describe the product.

4.2 The Manufacturer is responsible for establishing and maintaining a quality control program to assure compliance with the requirements of the specification. Documentation describing the quality control program shall be made available upon request.

4.3 The Manufacturer's certificate shall state that the root control product meets requirements of the specification as evaluated under the Manufacturer's quality control program. The certificate shall be attested to by a person having legal authority to bind the Manufacturer.

4.4 Either mislabeling or misrepresentation of materials shall be reason to reject those products.

5.0 SAMPLING, TESTING, AND ACCEPTANCE

5.1 Root control substrate product shall be subject to sampling and testing to verify conformance with this specification. Acceptance shall be based on manufacturer's certification.

5.2 Testing shall be performed in accordance with the methods referenced in this specification for the indicated application. The number of specimens to test per sample is specified by each test method.

6.0 SHIPMENT AND STORAGE

6.1 Product labels shall clearly show the manufacturer or supplier name, style number, and roll number and shall include a compliance statement certifying that all ingredients and inspection standards for this product have been met.

6.2 Each root control product roll shall be wrapped with a protective EVOH bag and placed in a box that will protect the product from damage due to shipment, water, sunlight, and contaminants and to prevent premature release of herbicide. The protective wrapping shall be maintained during periods of shipment and storage.

6.3 During storage, root control product shall be elevated off the ground and out of direct sunlight. It shall remain scaled in EVOH protective bag inside shipping box at a temperature of not more than 110° F.

7.0 PRODUCT DESCRIPTION

Active Chemical*: Triflualin (a,a,a-Trufluro 2,6 – dinitro – N,N, - Dipropyl – p – toluidine) 18.9%
Inert Ingredients: 100% Spunbonded Polypropylene, Polyethylene and Carbon 81.1%

Typical Values

Trifluralin Characteristics	English	Metric	Test Method
Vapor Pressure (mm Hg @25° CENTIGRADE	$1x10^{-4}$	$1x10^{-4}$	EPA CG 1600
Solubility in Water (ppm@25degrees C)	<0.3	<0.3	EPA CG 1500

Minimum Values

Fabric Properties	English	Metric	Test Method
Unit Weight	3.9 oz/yd^2	130 g/m^2	ASTM D-5261
Grab Tensile Strength	130 lbs.	575 N	ASTM D-4632
Elongation at Break	60%	60%	ASTM D-4632
Puncture Strength	40 lbs.	175 N	ASTM D-4833
Trap Tear	60 lbs.	265 N	ASTM D-4533
Permittivity	0.7 sec.	0.7 sec.	ASTM D-4491
AOS (Max Value)	0.21mm	0.21mm	ASTM D-4355
Ultraviolet Stability	70% @ 500 hrs.	70% @ 500 hrs.	ASTM D-4355

*Test methods or revision numbers available on request (18.9% Average trifluralin in total composite. Min. of 20% trifluralin in nodules)

TECHNICAL DATA – Biobarrier

The hemispherical shaped nodules on Biobarrier contain one active ingredient (trifluralin) and two inactive ingredients (polyethylene and carbon black). Biobarrier is engineered to release the trifluralin very slowly in vapor form and establish a narrow (see chart below) protective chemical zone in soil adjacent to the fabric. This unique delivery method combined with the chemical characteristics of trifluralin detailed below, ensure that the chemical zone remains very near the fabric and does not present a significant leaching problem. Trifluralin has been used extensively in commercial applications for over 35 years and is widely recognized as a leading preemergence herbicide. See EPA Toxicity Rating for trifluralin below. Note: The United States EPA does not require a pesticide applicator license to install Biobarrier. Check agency in your area for local regulations.

Environmental Fate of Trifluralin

Solubility in Water	<0.3 ppm @ 25° C
Vapor Pressure (mm Hg @ 25oC)	1 x 10^{-4}
Degradation in Soil	1 to 6 months
***Toxicity Examples**	
Half Life	
Air Photolysis	42 Minutes
Water Photolysis	9 Hours
Soil Photolysis (Dark)	41 Days
Soil Photolysis (Light)	66 Days

EPA Toxicity Ratings

1. Extremely Toxic	50
2. Highly Toxic	50 to 500
3. Moderately Toxic	500 to 5,000
4. Practically Non-Toxic	5,000 to15,000

1. Nicotine	32
2. Aspirin	1,000
3. Salt	3,000
4. **Trifluralin**	**10,000**
5. Alcohol	14,000
6. Sugar	29,000

**Acute oral (rats)*

140.00—

Trifluralin In Soil

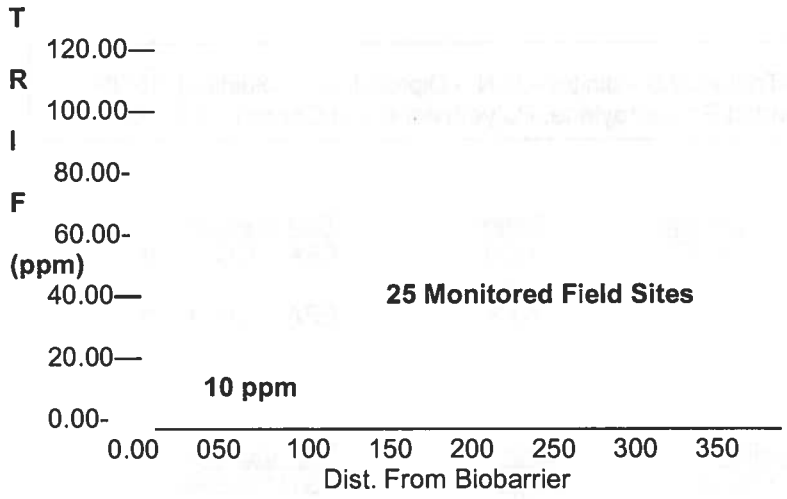

Weed control mat shall be a commercial weed control product. The mat shall be a composite of polyester base fiber and vinyl chloride resin and shall be permeable to air and water but shall prevent sunlight from reaching the soil. The mat shall contain no herbicides but shall resist ultraviolet light, mildew, and algae. The mat shall be self-extinguishing when removed from flame.

Payment will be made under the following items:

ITEM E615.xy WEED CONTROL MAT

x		1 ft.	2 ft.	3 ft.	4 ft.	5 ft.	6 ft.
1	Length	$	$	$	$	$	$
2	50 ft.	$	$	$	$	$	$
3	100 ft.	$	$	$	$	$	$
4	150 ft	$	$	$	$	$	$
5	200	$	$	$	$	$	$
6	250 ft.	$	$	$	$	$	$

Where y equals width in ft.

ITEM E615.99 - WEED AND VEGETATION CONTROL

Weed and vegetation control will be by Agro Statics "Electro + - Static Spraying" process *or equal*.

All New York State DEC Standard Policies and Regulations shall be adhered to.

The bid price per mile for item shall include the cost of delivering and applying New York State environmentally accepted weed and brush spray to any location in Erie County.

Item E615.99 - Weed and Vegetation Control $ _____ Per Mile

SECTION 618

BITUMINOUS MATERIAL

Section 618 of the NYSDOT Standard Specifications dated May 1, 2008 shall apply except as amended herein.

The bid price per gallon for items delivered and applied shall include the cost of delivering and applying the liquid bituminous material at any location within Erie County.

The bid price per gallon for F.0.B. items shall include the cost of heating (as appropriate) and loading aboard County owned or rented containers at the supplier storage facility.

Payment for all heated materials will be for the number of gallons furnished and applied, measured at a temperature of 60°F.

Supplier will indicate minimum quantity or minimum charge per delivery on applicable items.

Specifications for Items E618.3102 and E618.4102 are attached.

Item Number	Item	Delivered & Applied	F.O.B. Plant
618.04	Paving Asphalt (AC.15)	_____	_____
618.05	Paving Asphalt (AC-20)	_____	_____
618.07	Misc. Asphalt Cement (18-60) Joint/Crack Filler packaged in paper containers	_____	_____
618.20	Medium Curing Liquid Asphalt (MC-30)	_____	_____
618.21	Medium Curing Liquid Asphalt (MC-70)	_____	_____
618.22	Medium Curing Liquid Asphalt (MC-250)	_____	_____
618.3001	Asphalt Emulsion (RS-1	_____	_____
618.3101	Asphalt Emulsion (RS-2)	_____	_____
618.3102	Asphalt Emulsion (HFRS-2)	_____	_____
E618.3102	Asphalt Emulsion (HFRS-2P)	_____	_____
618.3201	Asphalt Emulsion (MS-2)	_____	_____
618.3301	Asphalt Emulsion (HFMS-2)	_____	_____
618.3401	Asphalt Emulsion (HFMS-2H)	_____	_____
618.3501	Asphalt Emulsion (SS-1)	_____	_____
618.3601	Asphalt Emulsion (SS-IH)	_____	_____
406.01	Asphalt Emulsion (HFMS-2GH)	_____	_____
618.4001	Catonic Asphalt Emulsion (CRS-1)	_____	_____
618.4101	Catonic Asphalt Emulsion (CRS-2)	_____	_____
E618.4101	Catonic Rapid Set Emulsion (CRS-2P)	_____	_____
618.4201	Catonic Asphalt Emulsion (CMS-2)	_____	_____
618.4301	Catonic Asphalt Emulsion (CMS-2H)	_____	_____
618.4401	Catonic Asphalt Emulsion (CSS-1)	_____	_____
618.4501	Catonic Asphalt Emulsion (CSS-IH)	_____	_____
618.99	Asphalt Emulsion Tack Coat (minimum charge per delivery = 500 gallon)	_____	_____
Waiting time for asphalt emulsion tack coat Application (per hour after first hour on project.)		_____	Per hour

Hand Spray Patching - additional charge per gallon to any delivered and applied 618 item.	_____	Per gallon
Bar Spray Patching - additional charge per gallon to any delivery and applied 618 item.	_____	Per gallon
Spray Patch Tank Rental - Portable Spray Patch Tanks shall be equipped with a gasoline driven pressure pump with by-pass and suck-back capabilities. Tanks will be a minimum 500 gallon capacity, capable of being top or bottom loaded, insulated, and skid mounted. Prices bid shall include unit loading on County owned vehicle at supplier's plant. The necessary labor and fuel to be supplied by the County.	$	Per gallon
Add to F.O.B. Prices	_____	
Self Propelled Stone Spreader - Additional charge per gallon to any delivered and applied 618 Item. Furnish self propelled stone spreader to uniformly apply aggregates for the above operations. Spreader to supplied to job site with operator, fuel and maintenance.		
For full width surface treatment	$ _____	Per gallon
For bar spray patching	$ _____	Per gallon
Maximum Charge per Day	$_____	
For Mixing Liquid Bituminous Material in Portable Pugmill and Placement with a Paver - Additional charge per gallon to any delivered and applied item listed below shall include a pugmill with operator and an approved paver with operator at any location within Erie County. Mixing equipment shall conform to New York State specification 302-3.02		
618.3201 (MS-2)	$ _____	Per gallon
618.3301 (HFMS-2)	$ _____	Per gallon
406.01 (HFMS-2GH)	$ _____	Per gallon
For Mixing Bituminous Material in a Traveling Plant Mixer – Additional Charge per gallon to any delivered and applied item listed below shall include a self propelled traveling plant with operator at any location in Erie County		
618.3201 (MS-2)	$ _____	Per gallon
618.3301 (HFMS-2)	$ _____	Per gallon
618.4201 (CMS-2)	$ _____	Per gallon
618.4301 (CMS-2H)	$ _____	Per gallon

For Mixing Bituminous Material in a Traveling Plant Mixer with a Shoulder Attachment - Additional charge per gallon to any delivered and applied item listed below. Price shall include a self propelled traveling plant mixer with a shoulder widening attachment with operator to any location in Erie County.

E618.3201 (MS-2)	$ _____ Per gallon
E618.3301 (HFMS-2)	$ _____ Per gallon
E618.4201 (CMS-2)	$ _____ Per gallon
E618.4301 (CMS-2h)	$ _____ Per gallon
Minimum Charge per Day	$ _____
Maximum Charge per Day	$ _____

POLYMER MODIFIED ASPHALT EMULSION

ITEM E618.3102 - ANIONIC (HIGH FLOAT) RAPID SET EMULSION GRADE : HFRS - 2P

The emulsion is a High Float, Rapid Setting, Polymer Modified emulsion. It shall be homogeneous and shall conform to the following requirements.

Properties	Minimum	Maximum
Viscosity Say bolt Furol @ 122F (50C), sec.	100	400
Storage Stability 24 hour, %	---	1.0
Demulsibility, 0.22 N CaC1, %	60	---
Sieve Test, %	---	0.10
Polymer, Wt. %	2	---
Distillation		
Oil Distillate, by volume of emulsion, %	---	3
Residue form distillation, %	63	---
Tests on Residue from distillation		
Penetration, 77°F (25°C) 100g, 5 sec.	100	200
Ductility, 39.2°F (4°C), 5 cm/Minute, cm.	50	---
Float Test @ 140°F (60°C), sec.	1200	---
Solubility in Trichlorethylene, %	97.5	---
Viscosity @ 140°F, @ sec-1 Poise (C)	1500	---

(a) All tests shall be run in accordance with ASTM D-244 except as noted.
(b) ASTM D-244 except that the maximum temperature that the material shall be subjected to is 383^0 F 10^0F.
(c) ASTM Method P-160 published 1984.
(d) The demulsibility test shall be performed within 30 days from the date of shipment.

The emulsion shall remain homogeneous and usable for a minimum of 30 days. The supplier will not be held responsible for emulsion test of samples that have frozen before testing. The polymer shall be added at the time of manufacture of the emulsion.

POLYMER MODIFIED ASPHALT EMULSION

ITEM E618.4102 - CATIONIC RAPID SET EMULSION GRADE: CRS - 2P

Tests on Emulsion	Minimum	Maximum
Viscosity Say bolt Furol @ 122F (50C), sec.	100	400
Storage Stability Test, One (1) Day	---	---
(Difference in percent residue)		
Classification Test		
Particle Charge Test		
Sieve Test, 20 Mesh, Percent		0.3
Polymer, Wt. %	2	---
Distillation		
Residue form distillation	65	---
Oil Distillate, Volume Total Emulsion, %	---	3
Tests on Residue from distillation: 1		
Penetration, 77°F (25°C) 100g, 5 sec.	100	200
Ductility, 39.2°F (25°C), 5 cm/Minute, cm. (ASTM D113)	50	---
Softening Point, Ring & Ball, degree F (ASTM D36)	100	---
Elastic Recovery, % (3)	50	---

(1) Modifies shall not be post-added to the finished emulsion. All modifies shall be incorporated during the milling process at the manufacturer's facility.

(2) Maximum distillation temperature for distillation test is 350 degrees F. This is an exception to ASTM D244.

(3) Elastic Recovery: The ductilometer and samples are to be conditioned at 50 degrees F prior to the test. Prepare the brass plate, mold and briquette specimen in accordance with ASTM D113. The molds shall be of the non-tapered type use for Force Ductility Testing. Maintain the specimen at the specified temperature of 50 degrees F for 85--90 minutes. Immediately after conditioning, place the specimen in the ductilomenter and proceed to elongating the sample to 20 centimeters at a rate of pull of 5 cm/min. After the 20 second elongation has been reached , stop the ductilometer and hold the sample in its elongated position for 5 minutes. After 5 minutes, clip the sample approximately in half and allow the sample to remain undisturbed in the ductilometer for one (1) hour. After 1 hour retract the half sample specimen until the two broken ends touch. Note the elongation (E) in centimeters and calculate the percent elongation as follows:

$$\% \text{ Recovery} = \frac{20 - E \times 100}{20}$$

ITEM E618.9901 - LIQUID MEMBRANE POLYMER ("LMP")

1.0 DESCRIPTION

This specification applies to asphaltic polymer compounds used to rejuvenate, strengthen, and waterproof asphalic materials used to repair asphalt and concrete roadway surfaces.

2.0 MATERIALS

Single component, water reducible, asphaltic polymer bonding and sealing compound for asphalt or concrete roadway surfaces.

3.0 APPLICATION

Apply in accordance with manufacturer's instructions.

4.0 METHOD OF MEASUREMENT

The amount of material used shall be measured as the number of gallons applied to the roadway.

5.0 BASIS OF PAYMENT

The unit price bid per gallon for the material shall include the cost of furnishing materials and all labor and equipment necessary to complete the work.

Five (5) Gallon Pail	$_____
Fifty-five (55) Gallon Drum	$_____

ITEM E618.9902 – FOAMIX ™

Description:

Foamix™ is a mixture of mineral aggregate and foamed asphalt cement producing a bituminous stabilized road building material suitable for base construction. The Foamix™ shall be produced in a mixer where the mineral aggregate is introduced at ambient temperature and combined with foamed hot asphalt cement. The asphalt, as foam is dispersed throughout the aggregate and selectively coats the fine particles, which agglomerate forming a stable matrix for the larger aggregate particles.

Materials:

Aggregates:

Table 1
Aggregates for Foamed Asphalt Cold Mixes

Type	Processed Dense Graded Mixture				Semi Processed Crusher, Pit or Bank Run	Sands	Silty Sands
Sieve U.S.							
1-1/2"	100	100			100		
1"	90 -100	90 - 100			80 - 100		
¾"			100				
½"	60 - 80		90 - 100	100		100	100
3/8"		60 - 80		90 - 100			
#4	25 - 60	35 - 65	45 - 70	60 - 80	25 - 85	75 - 100	75 - 100
#8	25 - 45	20 - 50	25 - 55	35 - 65			
#50	5 - 18	5 - 20	5 - 20	6 - 25			
#100							15 - 65
#200	3 - 15	3 - 15	3 - 15	3 - 15	3 - 15	3 - 12	12 - 25
	Sand Equivalent, percent or Plasticity Index				25 minimum all gradations or 15 Maximum all gradations		

Either control may be applied but not both

Notes:

1) For certain purpose satisfactory results may be obtained with materials not conforming to these controls. Such use may be permitted based on field experience or laboratory studies.

2) Fines content and characteristics can have a significant effect upon foamed asphalt mixtures. Addition of some –200 mesh filler should be considered with material containing minimum –200 mesh fractions. Where fines are classified as clay, addition of a small percentage of lime may be advisable and economic.

Bituminous Material:

Standard asphalt cements are used in all foamed asphalt mixtures. The asphalt grades include, but are not limited to, AC-5, AC-15 or AC-20. Climate and specific surface conditions should be considered in the selection of the grade to be used.

Composition of Mixture:

The Foamix™ shall be a mixture of aggregate and hot asphalt cement to form a suitable stabilized base course. The amount of asphalt cement added will range between three (3) to six (6) percent by weight of day aggregate as ordered by the engineer.

Equipment:

The equipment for producing Foamix™ shall have an aggregate feeder, an asphalt pump, a high-pressure water injection system, foam mixing chamber, a spray bar and a rotating twin shaft mixer to produce a controlled homogeneous mix. The aggregate feeder will be able to deliver a controlled, non-surge flow of material. The asphalt system and high-pressure water system shall be positive displacement type, capable of metering precise amounts to the foam, mixing chamber. The twin shaft mixer shall be continuous with the capability to thoroughly blend the granular material and the foamed asphalt.

To verify flow rates of the asphalt and water, by-pass valves shall be provided in each system.

A thermometer capable of measuring to 450° F shall be located in the asphalt line to monitor temperature of the asphalt cement.

A foam sample valve shall be provided at the foam-generating chamber.

Method of Measurement:

The quantity to be paid for will be gallons of asphalt cement incorporated into the mix, temperature corrected to 60° F. All aggregate, aggregate hauling, incidental labor and compaction will be supplied by others.

Basis of Payment:

The unit price bid per gallon of asphalt cement incorporated through the Foamix™ process will include the mixing equipment delivered to the mixing site, a mixer operator, fuel, equipment maintenance and asphalt cement delivered to the mixer.

E618.9902 **Price Per Gallon $_____ @ 60° F**

ITEM E618.9903 – ASPHALT EMULSION SLURRY SEAL

Description:

The slurry seal shall consist of a mixture of emulsion, mineral aggregate, and water properly proportioned mixed and spread evenly on the surface as specified. The slurry shall have a homogeneous appearance, adhere firmly to the surface and have a skid resistant texture.

Materials:

1) **Asphalt Emulsion:**

The emulsified asphalt shall conform to **AASHTO** specifications for dense mixing grade CSS-1h except that they be of the Quick Set Slurry Seal Emulsion Type and in conformance with ISSA.

2) **Aggregate:**

The mineral aggregate shall consist of one hundred (100%) percent stone screenings, crushed gravel or slag. The aggregate shall be cleaned and free from vegetable matter and other deleterious substances. When tested according to ASTM D-2419, the aggregate shall have a sand equivalent of not less than 45. When tested according to AASHTO -T-104 the aggregate shall show a Los Angeles Rattler loss of not more than thirty-five (35%) percent. When tested in accordance with ASTM D-2419, aggregate shall be non-plastic.

Mineral fillers or liquid retarding and accelerating agent will be considered as part of the aggregate blend and shall be used in minimum required amount. Mineral filler shall only be used if needed to improve the workability of the mix or gradation of the aggregate and shall be graded sufficiently fine to effect complete dispersion through the mixture. The aggregate proposed for use in the work shall have a proven durability record for the conditions and traffic expected.

The combined mineral aggregate shall conform to the following dry gradation when tested by ASTM C136:

Type II (Slurry Seal) Percent	
Sieve Size	**Passing (Dry)**
3/8	100
No. 4	90-100
No. 8	65-90
No. 16	45-70
No. 30	30-50
No. 50	18-30
No. 100	10-21
No. 200	5-15

Theoretical Residual Asphalt Content, percent (%) extracted from dry sample: 9-12

2) **Water:**

All water used with the slurry mixture will be potable and free from harmful soluble salts.

3) **Stockpiling of Aggregates:**

When stockpiling aggregate, care shall be taken so the aggregate stockpile will not become contaminated with oversize materials or other contamination. Segregation of the aggregate will not be permitted.

4) **Storage of Asphalt Emulsion:**

The contract shall provide suitable storage facilities for the asphalt emulsion. The container shall be equipped to prevent water from entering the emulsion. Suitable heat shall be provided if necessary to prevent freezing.

5) **Sampling:**

Samples of materials and of the finished slurry surface shall be furnished by the Contractor as directed by the Contracting Officer, Contractor as additional materials arrive.

6) **Design, Certifications and Demonstrations:**

A) **Prior to Construction**:

Sources of all materials shall be selected prior to the time the materials are required for use in the work. All materials shall be pre-tested in a qualified laboratory, as to their suitability for use in slurry. A job mix formula for the slurry mixture shall be prepared prior to construction. More specifically:

The contractor shall furnish the Commissioner of Public Works prior to the start of work, a certified statement from the emulsion manufacturer giving analysis of the base asphalt used in the manufacture of the emulsion. The statement shall also certify that the material represented is true **Quick Set** emulsion, passing all above procedures. The contractor shall furnish the Commissioner of Public Works prior to the start of work, a certified testing date sheet from a qualified laboratory. The data sheet will show that the test methods and results on the emulsion and the aggregate, conform to the requirements of these specifications.

B) **Prior to the Start of Work:**

The contractor shall furnish the Commissioner of Public Works prior to the start of work, a job mix formula for the slurry mixture. Acceptance of the formula by the Commissioner is solely for the purpose of quality control, and in no way releases the contractor from his responsibilities. The job mix formula shall provide as a minimum:

1) Sieve analysis of aggregate
2) Percent of mineral filler
3) Percent of water
4) Percent of asphalt emulsion
5) Unit weight of dry aggregate lbs./cu. ft. loose and compacted
6) Sample mixes should be evaluated by acceptable testing procedures as to their setting time, mixing characteristics, resistance to rain and abrasion should also be included in this report.
7) Observed effects of moisture content on the specific weights of the test aggregate
8) Application rate of dry aggregate in lbs./sq. yd.

Acceptance of the mix formula by the Commissioner must be done prior to construction start-up. If not, the contractor takes full responsibility for all costs incurred if application of slurry is done prior to this acceptance.

C) The Contractor:

Shall submit, along with the required written materials analysis and proposed job mix formula the following physical specimens:

1) 5kg. Of the proposed aggregate selected
2) 4 liters of the proposed emulsion selected
3) ½ keg. Of the filler selected, if applicable
4) 3 series of consistency tests as 100, 85, and 70% BR (Bitumen Requirement and at 2-3, 4-5, and 5-7 cm. Consistencies
5) 2 each of Abraded Wet Track Abrasion Test specimens of 100, 85, and 70% BR (bitumen Requirements)

Each specimen shall be indelibly identified with the date and source. The Commissioner of Public Works shall waive the design submittals provided the bidder has previously applied a satisfactorily designed and applied slurry with the same materials proposed for this work. The bidder shall submit a list of completed projects and sources used to the Commissioner of Public Works if the design requirement is waived. In any case untried materials may not be introduced into this work without complete analysis and design of a job mix formula for each new material approved by the Commissioner of Public Works.

7) During Construction:

A) Contractor:

The contractor is to provide extraction tests performed by a qualified laboratory as required by the Commissioner of Public Works. At least one (1) test per day or every 2,500 square yards of work shall be performed and results documented. If asphalt content or other parameter is found to be out of specifications and not in conformance with the job mix, immediate corrections shall be taken on the remainder of the work and all work already in place shall be evaluated for possible reapplication of slurry, at no additional cost to the Public Works Department. The Commissioner of Public Works will also have the authority to make equitable adjustment in contract price for deficient work based upon test results. Test results are to be submitted to the Commissioner of Public Works within one week of sampling.

B) Samples:

The contractor as directed by the Commissioner of Public Works shall furnish Samples of materials and of the finished slurry surface during progress of the work. The Commissioner may request test reports from the contractor as additional materials arrive.

8) Guarantee:

A) The Bidder:

Shall guarantee that all material and equipment used to fulfill this contract meets the enclosed specifications.

B) Guarantee:

A two (2) year guarantee for defective or inferior bituminous material and/or workmanship shall apply to all bituminous materials supplied and applied under this contract.

9) Equipment, (Tools and Machines)

The equipment, tools and machines needed in the performance of the work shall be provided by the contractor, shall be subject to approval by the Commissioner of Public Works and shall be maintained in a satisfactory working condition at all times. The contractor at the time of bidding shall own the equipment with which he intends to complete the contract, if so awarded.

A) Mixing and Application Machines:

The slurry mixing and application Machine shall be a self-propelled continuous flow unit capable of interlocking and accurately delivering a predetermined proportion of aggregate, water, and asphalt emulsion to the mixing chamber and of discharging the thoroughly mixed product on a continuous basis. No violent mixing shall be permitted. Each material function of the machine (fines, aggregate, emulsion, and water) shall be accurately metered. The machine shall be automated with time delays so that all functions can be controlled by one switch.

B) Fines Feeder:

The slurry seal machine shall be equipped with a fines feeder that provides an accurate metering device or method to introduce a predetermined proportioned of mineral filler into the mixer at the same time and location as the aggregate. The fines feeder shall be used whenever mineral filler is a part of the aggregate blend.

C) Fogging:

The slurry seal machine shall be equipped with a water pressure system and fog-type spray bar adequate for complete fogging of the pavement surface with a maximum application of .05 gal. Per square yard. The spray bar shall be so mounted on the mixing machine that fogging will immediately precede application of the slurry seal mixture.

D) Storage Capacity on Machine:

Slurry mixing equipment shall have a minimum five (5) cubic yard hopper, four (400) hundred pound cement hopper, with a six (600) hundred gallon emulsion tank and a six (600) hundred gallon water tank.

Slurry Spreading Equipment: A variable-width mechanical type squeegee spreader box shall be attached to the slurry seal, mixing machine. The spreader box shall be equipped and maintained with flexible material in contact with the pavement surface to prevent loss of slurry from the spreader box on varying grades and crown.

The spreader box shall be equipped for lateral distribution of the slurry mixture within the spreader box regardless of the spreader box width or crown or bank of pavement surface. The spreader box shall be kept clean, and build-up of asphalt and aggregate on either squeegee or spreader box shall not be permitted. Burlap drags or other drags shall be provided and shall be cleaned or replaced as needed to prevent accumulation or crusts of slurry seal mix on the drag.

Ownership Requirements: The contractor must own and have available a minimum of three (3) continuous flow five (5) cubic yard slurry machines, so that the delay or inconvenience to the public will be held to a minimum.

Auxiliary Equipment: Hand squeegees, the contractor as necessary to perform the work shall provide shovels, and other hand equipment.

10) Composition and Application of Slurry Mixture

Composition-Application: The amount of asphalt emulsion to be blended with the aggregate will be determined by the laboratory report provided by the contractor, subject to final adjustment in the field to allow for absorption by the existing surface. The amount of water added must be controlled accurately to insure production of spread able yet completely stable slurry. The slurry shall be a homogeneous mixture sufficiently stable during the entire mixing process and spreading period such that the emulsion does not break; that there is no segregation of the fines from the coarser aggregate and the liquid portion of the mix does not float to the surface.

Total time of mixing, from introduction of emulsion to spreading, shall be two minutes or less. The rate of application per unit shall be minimum, twelve (12lbs/ sq.yd.) pounds per square yard, maximum fifteen (15lbs/sq. yd.) pounds per square yard. Mixtures shall be adjusted as required on grades of eight (8%) percent or more.

Application: Sufficient quantities of the slurry seal mixture shall be fed into the spreader box such that a uniform and complete coverage of the pavement is obtained. The slurry seal machine shall be operated at such speed that the amount of slurry in the spreader box will remain essentially constant. The slurry mixture shall be the desired consistency as it leaves the mixer and no additional elements shall be added.

A sufficient amount of slurry shall be carried in all parts of the spreader at all times so that complete coverage is obtained. No lumping, balling, or unmixed aggregate shall be permitted. If the coarse aggregate settles to the bottom of the mix, the slurry will be removed from the pavement, and shall be replaced with a proper mix at no additional cost to the Public Works Department. No excessive breaking of the emulsion will be allowed in the spreader box. No build-up of cured slurry mix will be allowed to collect in the spreader box. No streaks caused by oversized aggregate particles or build-up slurry mix on squeegees shall be left in the finished surface.

Joints: The longitudinal joint between adjacent lanes shall have no visible lap, pinholes, or uncovered areas. Thick spots caused by overlapping will be smoothed immediately with hand squeegees before the emulsion breaks, so that a uniform surface is obtained.

Handwork: Approved squeegees shall be used to spread slurry in non-accessible areas to the slurry mixer. Care should be exercised in leaving no unsightly appearance from handwork. Handwork will also be required on radii, along curb and gutter lines and around fixtures.

Curing: Completed slurry seal shall be protected from traffic by barricades and markers for the period of time necessary for complete cure of material and longer when weather condition and thickness of slurry seal requires additional time for proper drying.

Protection of Fixtures: Special care shall be taken around road fixtures such as catch basins, manholes, water-boxes, gas valves, etc., so as not to cover, or impair from operation. All structures which may become marred by slurry will be marked prior to slurry application and cleaned immediately after application by sweeping, shoveling, wiping, etc., and all disturbance to the uncured surface caused by this activity will be touched up by hand.

Utmost care shall be taken by the contractor to keep asphalt materials off equipment, buildings, and etc., Buildings, etc., shall be covered when spraying adjacent to them. If noticeable amounts of the material are deposited on building walls, etc., it shall be removed by the contractor.

10) Weather Limitations:

No slurry shall be applied:

A) When there is any danger that the finished product will freeze before it cures completely.

B) When the pavement or air temperature is 55° F or *below* and *falling*, but may be applied when both air and pavement temperatures are 50° F or above and rising.

C) In the period following a rain while puddles of water remain on the surface to be coated. Slurries that cure by evaporation should not be laid during periods of abnormally high humidity, or when rain may fall within a few hours. However, if the contractor elects to proceed it will be his responsibility to replace any failed slurry.

Time: No slurry will be applied before 7:00 am or after 4:00 pm unless directed by the Commissioner of Public Works. An **anticipated** schedule of slurry application listing streets to be slurred per day will be submitted to the Commissioner of Public Works prior to commencement of operation. This will be used strictly for general information purposes of the department.

Traffic Control: Suitable methods such as barricades, flagmen, pilot cars, etc., shall be used to protect the uncured slurry will be the responsibility of the Contractor. The Contracting office shall give final approval to the method used. If damage occurs where suitable means have been made to protect the uncured slurry, violators will be prosecuted and the Contractor will be reimbursed for the amount of the damages.

Cleaning Equipment: Power brooms, power brushes, power blowers, water flushing equipment and hand brooms shall be suitable for cleaning the surface and cracks of the old surface.

Water Supply: It shall be the responsibility of the contracting agency to make available a source of clean, potable water in close proximity to the job site. Any charges incurred will be paid by the contracting agency.

Measurement:

Work prescribed by this item will be measured by the square yard surface area. The yard calculations will be based on dimensions determined from measurements of the actual area slurry sealed as authorized.

Payment:

The work performed as described in Measurement will be paid for at the unit price bid per square yard for "Slurry Sealed Pavement Surface". Measurement and payment will be limited to longitudinal length and width of which there is definite texture present. The payment per square yard shall include aggregate, emulsion equipment, and necessary labor to complete the work as specified.

Item E618.9903 Asphalt Emulsion Slurry Seal Pavement---Area	**Price per Square Yard**
5,000 – 10,000 Square Yards	$_____
10,001 – 25,000 Square Yards	$_____
25,001 – 50,000 Square Yards	$_____
50,001 and Over Square Yards	$_____

ITEM E618.9904 – SYNTHETIC PAVEMENT ("SP-III")

Description:

SP-III is a high performance "synthetic pavement." The product is used as deep penetrating stabilizer and sealer. SP-III provides protection from dust, mud, and erosion along most secondary road systems.

Material:

SP-III is a water-reducible polymer complex.

Application:

Areas of application of SP-III include secondary roadways, gravel and clay-based parking lots, park and golf paths. Application should be in accordance with the manufacturer's instruction.

Basis of Payment:

The unit price bid per gallon shall include the cost of furnishing materials and all labor and equipment necessary to complete the work.

Five (5) Gallon Pail $_____

Fifty-five (55) Gallon Drum $_____

ITEM E618.9905 - FIBER REINFORCED BITUMINOUS MEMBRANE SURFACE TREATMENT

SECTION-1 DESCRIPTION. The work shall consist in the construction of a fiber reinforced bituminous membrane surface treatment known as "**FiberMat – Type A**" as a Stress Absorbing Membrane, SAM and as "**FiberMat- Type B**" when used as a Stress Absorbing Membrane Interlayer, SAMI. This is accomplished by using a specific applicator, which can be mounted on an asphalt distributor modified for applying the surface treatment of bituminous binder reinforced with glass fibers. The applicator comprises an open bottomed spray bar housing fan or blower for producing a down draft in the housing, and at least one spray bar mounted on the housing and adapted to extend transversely in the direction of movement of the asphalt distributor on which the unit can be mounted.

A number of nozzles spaced longitudinally along the spray bar for spraying bituminous material, means of controlling the nozzles, and a number of sources for dispensing the cut glass fibers through the open bottomed housing to the surface of the bituminous material previously sprayed shall also be included.

Asphalt emulsion, aggregate and in-place chopped fibers are combined to form a versatile treatment, ideal for sealing as a SAM and arresting severely alligator cracked surfaces. The in-place chopped fiber gives the surface an improved tensile strength and resilience.

When applied within the pavement structure the fiber reinforced bituminous membrane surface treatment acts as a SAMI for the treatment of reflective cracking prior to the construction or placement of subsequent layers.

SECTION-2 MATERIALS

2.01 Bituminous Materials

A. Bituminous Material Approval. The bituminous material shall be obtained from a storage facility that has been approved by the Director, Materials Bureau within the current calendar, before the start of work.

B. Bituminous Material Selection. The selected bituminous material shall be compatible with the aggregate to be used. It is the contractor's responsibility to ensure compatibility between the bituminous material and the aggregate. The selection of bituminous material shall be subject to the approval of the NYSDOT, Materials Bureau Engineer, and conform to the standards below with the following exceptions.

1. **Surface Treatment**

Material Designation	Grade	Description
702-4701	CRS-1P	Polymer modified cationic asphalt emulsion
or where appropriate		
	CRS2P	Polymer modified cationic asphalt emulsion

Elastic recovery, 10oC – minimum 60%.

2.02 Aggregates. The aggregates for the fiber reinforced bituminous membrane surface treatment shall conform to the requirements of NYSDOT Item Section 703-02, " Coarse Aggregate" and be from an approved source. Where aggregates for pavement surface treatment are from more than one source or of more than on type of material, they shall be proportioned and blended to provide a uniform mixture. The regional Director or the authorized representative shall approve the procedure used for this proportioning.

Where the fiber reinforced bituminous membrane surface treatment is to be considered as a SAM then the aggregate size shall be Size 1, 1ST or Size 1A or a combination of both as in a double dressing.

Where the fiber reinforced bituminous membrane surface treatment is to be considered as a SAMI, then the aggregate size shall be Size1A only.

In both cases the aggregate shall meet one of the following:

1. Limestone having an acid insoluble content of not less than 20%, excluding particles of chert and similar siliceous rocks. Blends of siliceous and non-siliceous and non-siliceous limestone will not be permitted.
2. Dolomite.
3. Sandstone, granite, chert, trap rock, ore tailings, or other non-carbonate materials.
4. Gravel, or a natural or manufactured blend of two or more of the following types of material; limestone, dolomite, gravel, sandstone, granite, chert, tarp rock, ore tailings, slag or other similar materials meeting the following requirements
   - Non-carbonate plus 3.2mm particles must comprise a minimum 10% of the total aggregate (by weight with adjustments to equivalent volumes for materials of different specific gravities).
   - For Size 1A a minimum of 20% of plus 4.75mm particles must be non-carbonate.
   - For Size 1 ST a minimum of 20% of plus 9.5mm particles must be non-carbonate.

2.03 Polymer modifier. The ideal amount of solid or dry polymer modifier shall be 3%, based on the asphalt weight. The polymer materials shall be milled or blended into the asphalt or blended with the "soap phase" or post added to the emulsion but at all times ensuring good homogenization of the polymer with in the asphalt emulsion.

2.04 Fiber. The glass fiber is E Class from an approved source determined by the license holder. The glass fiber spools are supplied internally wound, in coils or cheeses. Typically the spools are cut in-place into nominally 60mm,(2.38") lengths which are distributed uniformly across and between the two parallel applications of modified asphalt emulsion. Glass fiber spread rates are up to 120g/sqm, (4oz), with additional asphalt emulsion rates of spread, depending on the site requirements.

SECTION- 3 CONSTRUCTION DETAILS

3.01 FIBER REINFORCED BITUMINOUS MEMBRANE SURFACE TREATMENT

A. Weather and Seasonal Limitations. The fiber reinforced bituminous membrane surface treatment may be applied on a dry or damp surface, but should not be laid where there is standing water or on a wet surface. Application should only be undertaken when the surface temperature is at least 10°C, (50°F), and rising, subject to site inspection. Greater initial traffic speed control may be required in certain circumstances, for example when the surface temperature is low.

The fiber reinforced bituminous membrane surface treatment shall be placed normally in New York during the period May 1st to the third Saturday in September. Application outside of these times is permissible only with the approval of the contractor and local Engineer.

B. Equipment. The following equipment shall be required:

1. Bituminous Material Distributor.

The liquid bituminous fiber applicator is used that could be mounted on a vehicle for applying a surface treatment of bituminous binder reinforced with glass fibers. The applicator shall comprise an open bottomed spray bar housing, a fan or blower producing a down draft in the housing, and at least one spray bar mounted on the housing and adapted to extend transversely in the direction of movement of the vehicle on which the applicator is mounted. A number of nozzles spaced longitudinally along the spray bar for spraying binder material,

means for controlling the nozzles, and a number of sources for dispensing cut glass fiber through the open bottomed housing to the surface of the binder material previously sprayed shall also be included.
The applicator shall have been calibrated within the previous 12 months for transverse and longitudinal distribution application rates according to ASTM D2995, Practice for Determining Application Rate of Bituminous Applicator or other suitable method. The bituminous fiber applicator shall be equipped, maintained, and operated so that the bituminous materials can be applied at controlled rates from 0.1 l/m2 (0.022gal/SY) to 2.5 l/m2 (0.56gal/SY). The fiber is applied at controlled rates from nominally 30 to 120g/m2 (approx.1-4oz/SY). These applications shall be such that a uniform first layer of asphalt emulsion is applied followed by uniform layer of glass fibers that is chopped in-place and covered with a uniform second layer of asphalt emulsion.

2. **Self-propelled aggregate spreader.** Aggregate spreader shall be a self-propelled unit capable of uniformly spreading the aggregate at the required rate on a minimum width of 150mm wider than the width of the lane to be treated. The spreader shall meet the approval of the Engineer and be calibrated similar to the test method used in ASTM D2995, within the previous 12 months, for transverse and longitudinal distribution.

3. **Pneumatic tire roller.** The Engineer will require a sufficient number of pneumatic tire rollers to permit the initial rolling of the aggregate to occur within 5 minutes of the application of the fiber reinforced bituminous membrane surface treatment. The pneumatic roller shall be self-propelled and have oscillating wheels with smooth tread tires and will have a minimum ballasted weight of 9 metric tons or 10 US tons. The tire pressure for all wheels shall be uniform within 2psi. The rollers shall be operated at a maximum speed of 8 km/hr, (5mph). To prevent pick-up of the aggregate on the tires, the tires shall be kept moistened with water mixed with small quantities of detergent or other material approved by the Engineer. In no case shall a solvent having an effect upon the fiber reinforced bituminous membrane surface treatment be used.

4. **Static steel-wheel rollers** shall be self-propelled and be either 9 to 11 metric ton tandem three-axle type or 7 to 9 ton tandem two-axle type. This shall be used particularly when a SAMI application is specified for the fiber reinforced bituminous membrane surface treatment following the pneumatic tire roller. The aim is to crush the aggregate and blind the surface prior to the application of the new overlay.

5. **Self-propelled Rotary Power Broom** A self-propelled rotary power broom shall so be designed, equipped, maintained and operated so that the pavement surface can be swept clean. The broom shall have an adjustment to control downward pressure. The power broom shall meet the approval of the Engineer. In the case where a SAMI is being overlaid the same or following day then a Vacuum sweeper shall be used only.

C. Determination of the Quantities of Materials to be Applied In conjunction with the Engineer the Contractor will decide upon the appropriate rates of asphalt emulsion and fiber for and during the job. Typical rates of application for the asphalt emulsion range from 1.8-2.7L/m2 (0.4-0.6 Gal/SY) and fiber application rates from 30-120g/m2 (approx. 1-4oz/SY).

1 For SAM applications the aggregate shall be of the 6mm, 10mm or 12.5mm maximum size and be added at rates as per conventional chip sealing operations – typically (11-13kg/m2 ---approx.19-26lb/SY).
2 For SAMI applications only the 6mm maximum size aggregate is used at typically (6-8kg/m2 --- 10-15lb/SY) to blind in the surface if it is to be overlaid within a few weeks. Otherwise higher aggregate application rates are employed and approved with the local engineer.

D. Preparation of Surface. A self-propelled power broom shall be used to clear any loose material from the surface to be treated immediately prior to the application of the fiber reinforced bituminous membrane surface treatment. Any surface-defects such, as potholes shall be repaired prior to commencement of works. Manhole covers, drop inlets, catch basins, curbs and any structure within the roadway area shall be protected against the fiber reinforced bituminous membrane surface treatment. Any cracks greater than ¼" shall be pre-treated with approved hot or cold polymer modified bituminous crack filler. Information on suitable crack fillers for use in-conjunction with the fiber reinforced bituminous membrane surface treatment can be given by the license holder.

E. Application of the fiber reinforced bituminous membrane surface treatment. Fibers and bituminous materials shall be applied by means of pressure distributor in a uniform, continuous spread over the section to be treated and within the temperature range, sandwiching the in-place chopped fibers between the two layers of asphalt emulsion. The quantities of fibers and bituminous materials shall be decided between the Engineer and Contractor dependant on the job site. The distributor shall be moving forward at the proper application speed at the time the spray bar and fiber chopper bars are opened. If any skipped areas or deficiencies occur, the operation shall be immediately stopped. Junctions of spreads shall be carefully made to assure a smooth riding surface and the deficient areas corrected in a manner approved by the Engineer. Overlaps of the membrane shall be made up to 6".

The fiber reinforced bituminous membrane surface treatment shall not be applied more than 50 meters, (150ft), in advance of the self-propelled chip spreader.
Under no circumstances shall operations proceed in such a manner that the fiber reinforced bituminous membrane surface treatment will be allowed to chill, set-up, dry or otherwise impair retention of the cover aggregate. Traffic will not be allowed to run on the unprotected fiber reinforced bituminous membrane surface treatment.
The distributor, when not spreading, shall be parked so that the spray bar or mechanism will not drip on the surface of the traveled way.

F. Application of the Cover Aggregate. Immediately following the application of the fiber reinforced bituminous membrane surface treatment, cover aggregate shall be spread at the rate agreed between the Engineer and Contractor.
Spreading shall be accomplished in such a manner that the tires of the aggregate spreader at no time contact the uncovered and newly applied fiber reinforced bituminous membrane surface treatment.
Immediately after the cover aggregate is spread, any deficient areas shall be covered by additional material. Pneumatic tire rolling shall begin immediately. The initial pass shall be completed within 5 minutes of the application of the fiber reinforced bituminous membrane surface treatment and shall be continued until three complete passes are obtained within 30 minutes of the application of the fiber reinforced bituminous membrane surface treatment. Pneumatic tire rollers shall come to a complete stop prior to a change in direction. For overlaps the first pass of aggregate and the space uncovered shall be up to 6". Upon the return pass the aggregate coverage shall be complete and over by up to 6" to insure full coverage of the membrane.

G. Opening to Traffic. "Loose Stone" signs meeting requirements of NYSMUTCD shall be posted at 1.6 km (1 mile), intervals throughout the length of the project. These signs shall be erected before treatment commences and removed after contract is accepted.
Unless otherwise specified, the highway shall be kept open to traffic at all times. Traffic shall be discontinued on the lane being surface treated; and as soon as the final layer is applied and rolled, controlled traffic may be permitted thereon. "Loose Stone" signs meeting requirements of NYSMUTCD shall be posted at 1.6 km (1 mile), intervals throughout the length of the project. Traffic shall be maintained at a speed not to exceed 24km/h, (15mph) for a period of four hours after placement of the fiber reinforced bituminous membrane surface treatment using two-way radio-equipped patrol vehicles in accordance with the maintenance and protection of traffic details

shown on the plans. All patrol vehicles shall be equipped with signs meeting the requirements of section 254.5 of the Manual of Uniform Traffic Control Devices.
Immediately after completion of the fiber reinforced bituminous membrane surface treatment, the section shall be posted for speed limit of 48km/h, (30mph), for a period of three days. The signs should be posted at 800-meter (0.5mile) intervals and signs showing other speed limitations should be covered for this period. All construction signs shall meet the requirements of the NYSMUTCD.

SECTION-4 METHOD OF MEASURMENT Fiber reinforced bituminous membrane surface treatment will be measured by the number of square meters of compacted material in place making no deductions for minor untreated areas such as catch basins and manholes.

SECTION-5 BASIS OF PAYMENT

5.01 Fiber reinforced bituminous membrane surface treatment. The unit price bid per square yard per day, plus the addition of any items the Agency requires the Contractor to furnish. The following items will be performed by the Agency, unless otherwise directed:

A. Manhole covers, water valves, catch basins, and other drainage structures shall be clearly referenced for location and adjustment.
B. Thermoplastic traffic markings shall be removed.
C. All vegetation at the edge of the pavement shall be removed.
D. Compaction with operator.
E. Furnish aggregate delivered to the Chip-Spreader.
F. Furnish Chip-Spreader.
G. Maintenance and Protection of Traffic.
H. Furnish self propelled Power Broom or Vacuum.

.02 Price Adjustments. The price escalation clause that applies to CRS-1p/ CRS-2p under the liquid portion of this bid shall also apply to Fiber Reinforced Bituminous Membrane Surface Treatment. The price adjustment per gallon shall be multiplied by a factor .4 to calculate the price adjustment per square yard.

Formula:

$$\text{Price Adj. Per SY} = \frac{\text{New Avg. FOB Terminal Price} - \text{Base Avg. Terminal Price}}{235} \times \text{Total Allowable Petroleum \%} \times .4$$

For purposes of this contract, the **September 1, 2012 Base Average** F.O.B. Terminal Price for Asphalt Cement shall be used. The price is **$576.00 per U.S. Ton.**

BID SHEET - FIBER REINFORCED BITUMINOUS MEMBRANE SURFACE TREATMENT

The undersigned bidder has carefully examined the specification for FIBER REINFORCED BITUMINOUS MEMBRANE SURFACE TREATMENT and agrees to furnish and supply all the materials, equipment, tools and labor necessary to properly install the product requested, in strict conformance to the detailed specification attached. No deviations, amendments, or alternative methods of application or installation of the product or specification will be considered.

Bidders are requested to submit prices per square yard for the two (2) types listed and Options A - F. The square yard range is the average daily square yards to be constructed on all project locations or work sites

SQUARE YARD RANGE	FiberMat Type A	FiberMat Type B	Option A	Option B	Option C	Option D	Option E	Option F
1 - 5,000 SY/Day	$ _____/SY	$ _____/SY	$ _____/SY	$ _____/SY	$ _____/SY	$ _____/SY	$ _____/SY	$ _____/SY
5,001 - 10,000 SY/Day	$ _____/SY	$ _____/SY	$ _____/SY	$ _____/SY	$ _____/SY	$ _____/SY	$ _____/SY	$ _____/SY
10,001 - 20,000 SY/Day	$ _____/SY	$ _____/SY	$ _____/SY	$ _____/SY	$ _____/SY	$ _____/SY	$ _____/SY	$ _____/SY
20,001 - 40,000 SY/Day	$ _____/SY	$ _____/SY	$ _____/SY	$ _____/SY	$ _____/SY	$ _____/SY	$ _____/SY	$ _____/SY
40,001+ SY/Day	$ _____/SY	$ _____/SY	$ _____/SY	$ _____/SY	$ _____/SY	$ _____/SY	$ _____/SY	$ _____/SY

OPTIONAL ADDITIONAL ITEMS (if Agency elects to require Contractor to provide any or all of these items)

A. If Contractor furnishes and delivers aggregate to aggregate Chip Spreader

B. If Contractor furnishes and operates self-propelled aggregate Chip Spreader

C. If Contractor furnishes and operates pneumatic tired roller (per roller)

D. If Contractor furnishes Maintenance & Protection of Traffic as per MUTCD

E. If Contractor furnishes and operates steel wheel roller (per roller)

F. If Contractor furnishes and operates self-propelled broom or vacuum sweeper

NAME OF COMPANY BIDDING:

P.O. BOX or STREET ADDRESS:

CITY:_____ STATE:_____ ZIP CODE:_____

TELEPHONE:_____ FAX:_____ FED. ID#:_____

SIGNATURE:_____ TYPED NAME:_____

Bidder agrees that this bid, if accepted, may be extended one (1) year upon written agreement of both parties.

SECTION 618
PRICE ADJUSTMENT FOR LIQUID BITUMINOUS MATERIAL

Price adjustments will be based on the New York State Office of General Services Formula as follows:

PRICE ADJUSTMENTS

1. Price adjustments allowed will be based on the **September 1, 2012** average of the F.O.B. terminal price per ton of AC-l0 or AC-20 asphalt cement (base average F.O.B. terminal price), at the following locations.

Chevron, Perth Amboy, New Jersey	NOCO, Tonawanda, NY
CITGO, Albany, New York	Suit-Kote, Cortland, NY
United Refinery, Tonawanda, NY	Gorman Brothers, Rensellear, NY
CITGO, Bayonne, New Jersey	Bitumar, Montreal, CANADA
Marathon, Tonawanda, New York	

The average F.O.B. terminal price per ton **for September 1, 2012 is $576 per English Ton.**

NOTE: The same grade of asphalt cement used in establishing the base average F.O.B. terminal price shall be used in establishing the new average F.O.B. terminal price.

Any introduction or withdrawal of a temporary voluntary allowance, terminal operator's allowance, or other discount offered to the trade in general from the posted price of asphalt cement at any of the above terminals will be considered, for purposes of price adjustment, as a change in the F.O.B. terminal price.

In the event that one or more of the above named sources discontinue posting a price for asphalt cement, the base average F.O.B. terminal price shall be recalculated by removing that location from the original base average F.O.B. terminal price. All new average F.O.B. terminal prices calculated from that date shall reflect the reduction in the number of reporting locations.

2. The new average F.O.B. terminal price will be determined based on the above F.O.B. terminal prices posted on the 20th of each month, hereafter known as the "Adjustment Date", during the contract period starting with March 20, 2013. However, price adjustments, in accordance with the formula below, will be effective for deliveries made on and after the first of the month (i.e., April 1, 2013) following the adjustment date.

3. The unit prices of bituminous materials purchased from any award based on this specification will be subject to adjustment based on the following formula:

"Price Adjustment (per gallon) **Equals** (New Average F.O.B. Terminal Price **Minus** Base Average Terminal Price) **Divided by** 235 **Times** Total Allowable Petroleum %.

NEW AVERAGE F.O.B. TERMINAL PRICE

The average F.O.B. terminal price for AC-10 or AC-20 asphalt cement at the above mentioned ten (10) locations as determined by the New York State Office of General Services on the 20th of the month.

BASE AVERAGE F.O.B. TERMINAL PRICE

The average F.O.B. terminal price of AC-10 or AC-20 asphalt cement as of October 1, 2012.

TOTAL ALLOWABLE PETROLEUM:

The percentage of total allowable petroleum for each item is as follows:

Material Designation	Grade	Asphalt %	Petroleum Allowance	Total Allowable Petroleum
702.0700	18-60	100	---	100%
702.3001	RS-1	55	2	57%
702.3101	RS-2	63	3	66%
702.3102	HFRS-2	63	3	66%
702.3201	MS-2	65	10	75%
702.3301	HFMS-2	65	10	75%
702.3401	HFMS-2h	65	3	68%
702.3501	SS-1	57	---	57%
702.3601	SS-1h	57	---	57%
702.4001	CRS-1	60	3	63%
702.4101	CRS-2	65	3	68%
702.4201	CMS-2	65	12	77%
702.4301	CMS-2H	65	12	77%
702.4401	CSS-1	57	---	57%
702.4501	CSS-1h	57	---	57%
702.90	Tack Coat	35	---	35%
705.0501		95	---	95%

Price Adjustments will not be allowed for materials which do not have an asphalt cement base.

EXAMPLE:

$$\frac{\$175.00 - \$145.00}{235} \times 0.66 = +\$0.84 \text{ per Gallon}$$

Item 702-3101
Base Avg. Price = $145.00
New Avg. Price = $175.00
TOTAL Allowable petroleum = 66%

Positive Price Adjustment number shall be added to original per gallon Bid Price.
Negative Price Adjustment number shall be subtracted from original per Gallon Bid Price.

4. Price adjustments allowed by this contract shall be calculated and applied to the original bid prices. There will not be price adjustments unless the change amounts to more than $0.01 per gallon from the original bid price. In these instances a purchasing memorandum will not be issued and prices will revert back to the original prices.

5. If at any time after March 20, 2013 the average posted price of asphalt cement at the aforementioned terminals increases or decreases by $4.00 per ton or more over or under the last average F.O.B. posted price utilized by the State for adjustment purposes, the State shall publish a special price adjustment which shall be effective eight (8) days subsequent to the date on which the change in the average F.O.B. posted price became effective.

6. All price adjustments will be computed by calculator to three decimal places.

7. Regardless of price adjustments allowed, at no time shall prices charged a County contract participant be higher than those offered commercial or governmental accounts for similar or lower quantities.

8. Should these provisions result in a price structure which becomes unworkable, detrimental or injurious to the County or in prices which are not truly reflective of market conditions or which are deemed by the County to be unreasonable or excessive, and no adjustment in price is mutually agreeable, the

County reserves the sole right upon ten (10) days written notice mailed to the contractor to terminate any contract resulting from this bid opening.

SECTION 619 MAINTENANCE AND PROTECTION OF TRAFFIC

FLASHER BARRICADES
(Daily Rental)

The purpose and intent of the following specifications is to describe flasher lights and barricades suitable for use by the Erie County Department of Public Works, Division of Highways. The lights and barricades shall conform to requirements of State of New York Department of Transportation with respect to uniform traffic control devices, together with all amendments and additions.

They are to be furnished on a daily rental basis. A specimen flasher barricade is to be submitted to the Department of Public Works, Division of Highways for approval.

DETAILED SPECIFICATIONS

A. **BARRICADE**: Rugged, all welded construction of 16-gauge metal. Legs, spring-loaded; locking on both open and closed positions and folding into main body of barricade for minimal set-up and take-down time, mobility, storage compactness, and ease of handling. Barricades provided must be in good condition, in high visibility, orange and white reflective contrasting colors. Barricade must be capable of remaining upright in high velocity winds (up to 60 MPH). Minimum weight/barricade. Forty (40) pounds. Barricades constructed of the alternate materials listed in Section 619-2.06 of the NYSDOT Standard Specifications may be supplied if approved by the County.

B. **FLASHER**: Heavy duty construction of 16.gauge metal; moisture-proof, transistor battery powered (continuous, high efficiency operation, battery life; 75 days (minimum). All flasher units supplied are to be of highest brightness intensity available. ***Flasher unit to be locked securely to barricade in such a manner as to have battery case located within barricade main body to minimize theft and vandalism***. Contractor to replace batteries periodically to insure acceptable efficient operation at all times.

C. Contractor will be required to provide a minimum of twenty (20) flasher barricades, four (4) to be stored at each of the following locations:

Clarence District 5105 Salt Road Clarence, New York	Aurora District 119 Ellicott Road West Falls, New York
Harlem District 1080 Harlem Rd. Cheektowaga, New York	East Concord District Sibley Road East Concord, New York
Hamburg District 50 West Avenue Hamburg, New York	

D. The unit bid price per day shall include any and all flasher barricades damaged or stolen.

Item 619.0303M – FLASHING ARROW BOARDS

All the provisions for item 619.0303M shall apply except:

MATERIALS:

The flashing arrow board shall be either diesel or solar powered.

The flashing arrow boards will have to be delivered to any location in Erie County as requested. Delivery may be required the same day.

The operation of the arrow board shall be explained and demonstrated to the General Crew Chief and/or Crew Chief.

METHOD OF MEASUREMENT:

Payment for this item will be made on a calendar day, week or monthly basis for each arrow board used.

Price per Flashing Arrow Board **$_____ per day (24 hours)**

$_____ per week (7 days)

$_____ per month

Charges for these units will be determined by actual "Time-In-Use" records maintained by the Highway Division.

Item E619.0401 Flasher Units Only

Approximately 10,000 flasher barricade unit days

Rental at $ _____ per unit-per day $ _____ Total

Rental at $ _____ per unit-per day attached to our barricade

$ _____ Total

Item E619.0402 Plastic Drum Barricade Flasher Units

Rental at $ _____ per unit-per day $ _____ Total

Item E619.0413 Type 3 Barricade

Rental at $ _____ per unit-per day $ _____ Total

Item E619.0414 Type 3 Barricades with Flasher

Rental at $ _____ per unit-per day $ _____ Total

ITEM 619.17M – TEMPORARY CONCRETE BARRIER

Description:

The purpose and intent of the following specifications is to describe temporary concrete barrier suitable for use by the Erie County Department of Public Works, Division of Highways. The temporary concrete barrier shall conform to the specifications adopted May 1, 2008 by the State of New York Department of Transportation with respect to Item 619.17M together with all amendments and additions.

Material:

Temporary concrete barriers shall conform to the dimensions, joint connections, material details, and anchoring details shown on the NYSDOT Standard Sheet M619-3R1. The barrier sections shall be precast concrete units. The manufacturer shall certify that the temporary concrete barrier units conform to the details shown on the standard sheet or approved drawing.

The Engineer will inspect the temporary concrete barrier sections upon delivery for conformance to specifications. Any barrier sections having damage and/or defects in the concrete and/or joint connections will be rejected by the engineer when in his judgment the performance of the barriers will be affected.

The temporary concrete barrier sections shall form a smooth and continuous barrier when joined together.

Basis of Payment:

Temporary concrete barrier shall be paid by the unit price bid per linear foot.

619.17M Temporary Concrete Barrier (Ten (10) linear foot length)	**$_____**	**Per linear foot F.O.B.**
619.17M Temporary Concrete Barrier (Twenty (20) linear foot length)	**$_____**	**Per linear foot F.O.B.**

Item 619.21 – 14 – PORTABLE, VARIABLE-MESSAGE SIGNS (PVMS)

All the provisions for item 619.21 -- 14 shall apply except:

MATERIALS:

Cellular Communications and Radar options will not be required.

The PMVS will have to be delivered to any location in Erie County as requested. Delivery may be required the same day.

The operation of the PMVS shall be explained and demonstrated to the General Crew Chief and/or Crew Chief.

CONSTRUCTION DETAILS:

Cellular Communications option will not be required.

METHOD OF MEASUREMENT:

Payment for this item will be made on a calendar day, week or monthly basis for each PVMS supplied.

Price per PVMS (LED)	**$_____**	**per day (24 hours)**
	$_____	**per week (7 days)**
	$_____	**per month**
Price per PVMS (Hybrid, Flip-disk)	**$_____**	**per day (24 hours)**
	$_____	**per week (7 days)**
	$_____	**per month**

E619.40 - PLASTIC DRUMS

The purpose and intent of the following specifications is to describe Plastic Drums suitable for use by the Erie County Department of Public Works, Division of Highways. The Plastic Drums shall conform to requirements of State of New York Department of Transportation with respect to uniform traffic control devices, together with all amendments and additions.

Drums for controlling traffic shall be about thirty-six inches high and at least eighteen inches in diameter (apparent width to approaching traffic). They should have drain holes so water cannot accumulate in them.

Plastic Drums rented to the Erie County Department of Public Works that were purchased after October 1, 1998 must be certified by their manufacturers or vendors as complying with NCHRP 350 testing requirements.

The markings on drums shall be horizontal, circumferential, alternating, orange reflectorized and white reflectorized stripes, four to eight inches wide. Each drum shall have at least two orange, and two white, reflectorized stripes. The reflectorized stripes shall be applied such that any ribs on the drum are between stripes, rather than occurring within a stripe. If there are non-reflectorized spaces between stripes, they shall not exceed two inches. The stripes should occupy the top portion of the drum. Portions of the drums not covered by the stripes shall be orange colored.

The Contractor will be required to deliver to each of the following locations:

Clarence District 5105 Salt Road Clarence, New York	Aurora District 119 Ellicott Road West Falls, New York
Harlem District 1080 Harlem Road Cheektowaga, New York	East Concord District Sibley Road East Concord, New York
Hamburg District 50 West Avenue Hamburg, New York	

The unit bid price shall include replacement of any and all drums damaged or stolen for rented drums

E619.40 - PLASTIC DRUMS RENTAL $_____Rental, Per Each per day

E619.41 – PLASTIC DRUMS PURCHASE $_____Purchase Price Per Each

SECTION 620 BANK AND CHANNEL PROTECTION

The NYSDOT Standard Specifications May 1, 2008 and all addenda shall apply except as modified herein.

Mobilization shall be included in the unit price bid.

	Item	Price	
E620.04	Stone Filling(Medium), **PLACEMENT ONLY**	$ _____	per ton
E620.05	Stone Filling (Heavy) **PLACEMENT ONLY**	$ _____	per ton
E620.06	Dry Rip Rap, **PLACEMENT ONLY**	$ _____	per ton

SECTION 624 PAVED GUTTERS

Section 624-1 through 624-5 of the New York State Standard Specifications dated May 1, 2008 and all addenda shall apply, except:

> All reference to measurement units in metric shall be converted to the English Units in accordance with the reference chart in the Standard Specifications Construction and Materials dated May 1, 2008.
>
> Section 624-3.02 Conventionally Formed or Machine Formed Concrete Gutters, in the first sentence insert "Erie County" before "...standard sheets."

One hundred fifty (150) square yards minimum per job site.

Refer to drawing below

E624.01 Conventionally Formed or Machine Formed Concrete Gutter **$_____Per square yard**

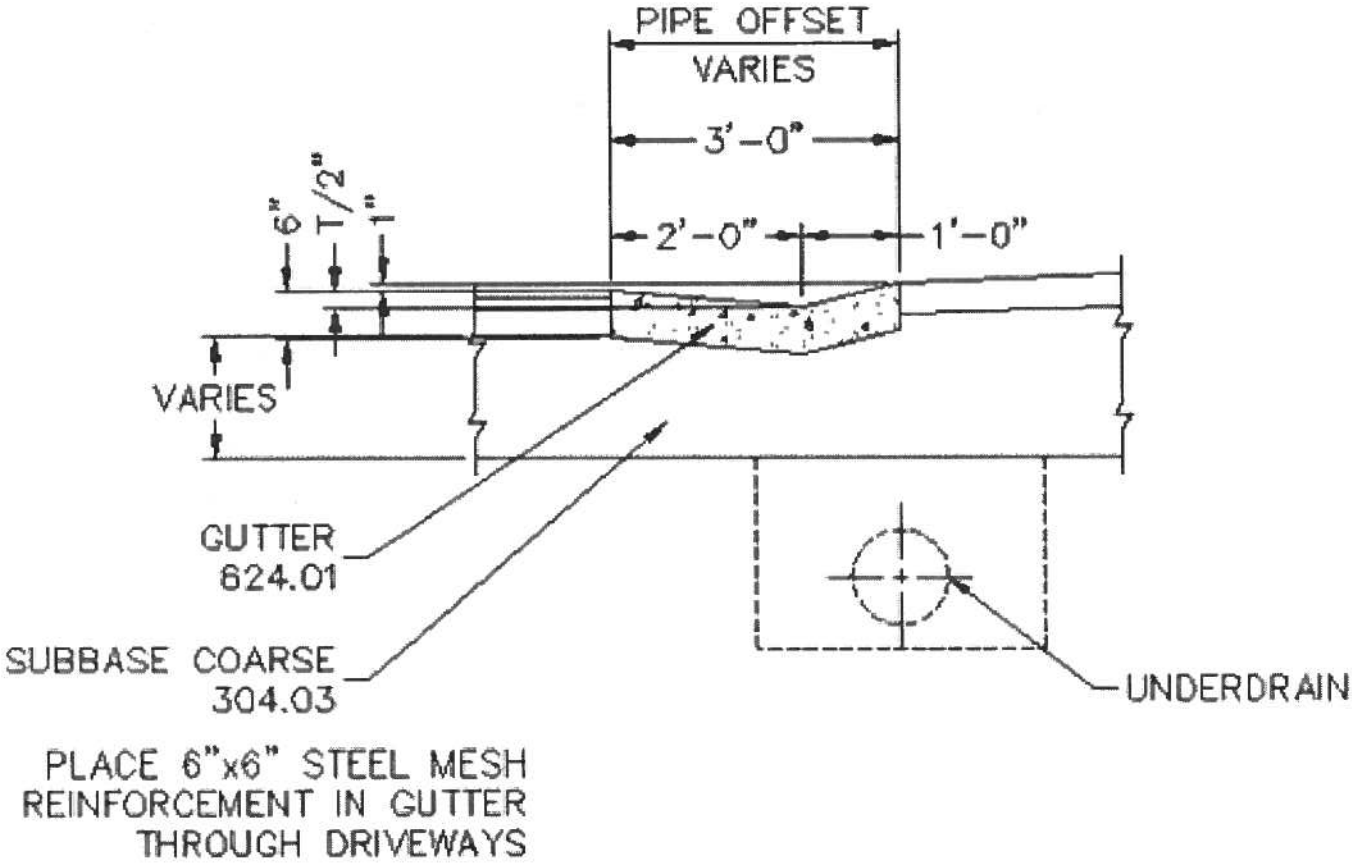

SECTION 633 CONDITIONING EXISTING PAVEMENT

ITEM E633.05 - FIBER REINFORCED ASPHALT JOINT AND CRACK SEALING

1.0 DESCRIPTION

The work to be done shall consist of performing all operations and furnishing all labor, equipment and materials and commence work within seven (7) days from receipt of order for cleaning and sealing miscellaneous cracks and joints in the pavement and shoulders using asphalt reinforced with polypropylene fiber.

2.0 REQUIREMENTS

1. General

Joints and cracks will be sealed using asphalt reinforced with polypropylene fiber. The sealant shall be applied in a one-step operation in which the hot (285° Fahrenheit maximum) sealant is placed directly into and over the joint or crack. Joints and cracks and adjacent pavement are to be cleaned by air blasting before applying sealant.

2. Composition of Sealant

a. The sealant shall be prepared using the following materials in the proportion specified:

Material	Type & Grade	% Basis Weight of Asphalt
Asphalt	AC-10 or AC-20	100
Fiber	Fiber Pave 5010 or Approved Equal	8.0 min. AC-10 7.0 min AC-20

b. The fiber shall meet the following requirements:

Material:	Polypropylene
Denier:	15 ± 1
Length:	10 ± 2 mm
Crimps:	None
Tensile Strength	40,000 psi, min
Specific Gravity	0.91
Moisture regain at 70° F and 65% R.H	0.1% (Typical)

3.0 SURFACE PREPARATION

The sealant shall be applied only when the joints and cracks and adjacent pavement surfaces are dry and free of dirt, vegetation, debris and loose sealant. Joints and cracks and adjacent pavement surface shall be cleaned by air blasting. Joints and Cracks in excess of one (1) inch width, shall be repaired by the County before applying the seal.

4.0 APPLICATION OF SEALANT

The width of the sealant shall be 3 inches and the thickness shall be 1/8 + 1/16 inch. Dust with mortar sand or approved equivalent when ambient temperature is greater that 70° Fahrenheit and

road is open to traffic immediately. Sealant shall be applied using a double jacketed kettle capable of maintaining specified temperature. Sealant will be pumped directly into cracks at a controlled rate and width of application.

5.0 COMPACTION

Rolling is not required. When applied in pedestrian traffic and parking areas, #IB stone will be spread over the sealant.

6.0 TRAFFIC CONTROL

Contractor shall be responsible for maintenance and protection of traffic as per "*New York State Manual of Uniform Traffic Control Devices*".

7.0 DEMONSTRATION

Before beginning the work the contractor will be required to demonstrate to the satisfaction of the Maintenance Supervisor his competence in mixing and applying a waterproofing sealant of fiber reinforced asphalt in accordance with this specification.

8.0 MEASUREMENT

The number of gallons to be paid for will be the actual gallons of Asphalt Cement applied to the cracks at the specified temperature. 200 Gallons will constitute a minimum order. Measurement of gallons used per day shall be a method approved by the Highway Maintenance Supervisor. No payment shall be made for material wasted or material unable to be pumped from the kettle.

9.0 PAYMENT

The unit price bid shall include the cost of asphalt and fiber, cleaning and preparing cracks, traffic control and all other costs associated with the work.

Bid Price E633.05 $_____per gallon

ITEM E633.06 - FIBER REINFORCED ASPHALT JOINT AND CRACK SEALING WITH MULTI-GRADE 10-30

1.0 DESCRIPTION

The work to be done shall consist of performing all operations and furnishing all labor, equipment materials and commencing work within seven (7) days from receipt of the order for cleaning and sealing miscellaneous cracks and joints in the pavement and shoulders using Multi-Grade 10-30 asphalt reinforced with polyester fibers.

2.0 REQUIREMENTS

1. General:

   Joints and cracks will be sealed using MG-10-30 asphalt reinforced with polyester fibers. The sealant shall be applied in a one-step operation in which the hot (325 degrees F. maximum) sealant is placed directly into and over the joint or crack. Joints and cracks and adjacent pavement are to be cleaned by air blasting before applying sealant.

2. Composition of Sealant:

   Asphalt Cement:
   The asphalt cement shall be Multi-Grade 10-30 (See Specifications Below) grade asphalt supplied by a primary source as defined in *Section 702* of the *NYSDOT Specification* dated May 1, 2008 and meeting the following specifications:

MODIFIED ASPHALT CEMENT SPECIFICATION CHARACTERISTIC [1]	**Multi-Grade MG 10-30 Minimum**	**ASTM METHOD**
Viscosity (2) @ 140 degrees F, P., 1 sec.-1	1000	D-4957
Viscosity (3) @ 275 degrees F, P., 10 sec.-1	7	D-4957
Penetration @ 77 degrees F, dmm.	55	D-5
Penetration @ 39 degrees F, 200 g. 60 sec., dmm.	20	D-5
Flash Point, degrees F.	475+	D-92
Solubility %	99+	D-2042
Softening Point, degrees F (1)	130+	D-38
TEST AFTER THIN FILM OVEN TEST (TFOT)		
Viscosity (2) @ 140 degrees F, P., 1 sec.-1	1000	D-4957
AGING INDEX	**MAXIMUM**	
Viscosity ATFOT/Vis. BTFOT, Maximum	2.5	

1. Handling of all samples for testing shall be in accordance with ASTM D-4957 Section 7.2, which requires heating the sample in an oven maintained at 383 degrees = +/- 4 degrees F.. Stir the sample occasionally until homogenous and pour in suitable container for testing. Pouring temperatures should be 356 degrees F. = +/-4 degrees F.. (180 degrees C=+/-20) on all tests.

2. Normally run using #200 Modified Koppers Viscometer tube at 300 mm of vacuum.

3. Normally run using a #50 Modified Koppers Viscometer tube at 30 mm of vacuum.

3.0 FIBERS

The fibers shall meet the following requirements:

Type of Fiber	Polyester	Tensile Strength	70 ksi minimum
Specific Gravity	1.32-1.40	Melt Temperature	475 degrees F. minimum
Elongation	33%=+/-9%	Length of Fiber	.25"=+/-.03"

Each container shall be legibly marked with the following information:
Manufacturer's Name Trade Name of Fiber Type of Fiber

4.0 SURFACE PREPARATION

The sealant shall be applied only when the joints and cracks and adjacent pavement surfaces are dry and free of dirt, vegetation, debris and cleaned by air blasting. **Joints and Cracks in excess of 1 inch width shall be repaired by the contracting agency before any sealant is applied.**

5.0 APPLICATION OF SEALANT

The width of the sealant shall not exceed 3 inches, and the thickness shall be l/8"inch +/-l6 inch. Dust with mortar sand or approved equivalent when ambient temperature is greater than 70 degrees F. and the road is open to traffic immediately. The sealant shall be applied using a double jacketed kettle capable of maintaining specified temperature. Sealant will be pumped directly into the cracks at a controlled rate and width of application.

6.0 COMPACTION

Rolling is not required. When applied in pedestrian traffic and parking areas, #1B stone will be spread over the sealant.

7.0 TRAFFIC CONTROL

The contractor shall be responsible for maintenance and protection of traffic as per ***"NEW YORK STATE MANUAL OF UNIFORM TRAFFIC CONTROL DEVICES"***.

8.0 DEMONSTRATION

Before beginning the work the contractor may be required to demonstrate to the satisfaction of the Purchasing Agency his competence in mixing and applying the waterproofing sealant of fiber reinforced Multi-Grade asphalt in accordance with these specifications.

9.0 MEASUREMENT

The number of gallons to be paid for will be the actual gallons of sealant applied to the cracks at the specified temperature. 200 gallons will constitute a minimum order. Measurement of gallons used per day shall be a method approved by the Contracting Agency. No payment shall be made for material wasted or material unable to be pumped from the kettle.

10. PAYMENT

The unit price bid shall include the cost of Multi-Grade Asphalt, fibers, cleaning and preparing cracks, traffic control and all other costs associated with the work.

Price Bid E633.06 Per Gallon: $_____

Item E634.36 – Under Bridge Access for Bridge Maintenance

DESCRIPTION:

This work shall consist of furnishing all operators, vehicles and equipment necessary to provide devices for special access under the direction of the County Highway Department or Municipal Highway Department in Erie County.

MATERIALS AND EQUIPMENT:

The supplier when schedule will be required to supplied a under bridge access unit with a 32' reach under the bridge and a platform or bucket capacity of 1000 pounds for bridge maintenance access that is needed. The Lightweight Under Bridge Access Unit may have to be used on weight restricted bridges as low as 3 tons. Towable apparatus will be allowed. Lift units that can operate in the streams will be allowed if they meet the environment requirements of NYSDEC.

CONSTRUCTION DETAILS:

The supplier shall provide the necessary equipment at the specified location as determined by the County. The equipment shall be in good condition and subject to approval by the County. If the equipment is found unsatisfactory, the supplier shall immediately replace such equipment to the satisfaction of the County.

The supplier shall process the necessary qualifications and experience to operate such equipment in the State of New York.

The supplier shall submit to the Senior Highway Maintenance Engineer specification and required certifications for the equipment prior to use.

The supplier shall inform the County what fall protection devices are required for operation prior to delivery to the site and whether they are furnished.

The supplier shall train the County personnel in the safe operation of this equipment.

Unless otherwise directed by the County, the qualified Supplier personnel shall be on site at all times that the device is being used. If the County does not want this person on site, there shall be a training session of the County personnel who will be operating the equipment.

METHOD OF MEASURE:

Payment for this item will be made on a calendar day, week or monthly basis for each Under Bridge Access Unit (UBAU) supplied.

Price per set of UBAU **$_____ per day (8 hours)**

$_____ per week (7 days)

$_____ per month

ITEM E636.0101 - EMERGENCY HIGHWAY REPAIR OVERHEAD AND PROFIT-PERCENT (MAXIMUM BID 20%)

1.0 DESCRIPTION

Under this pay item the contractor will be compensated for overhead and profit in the cost of the work performed under a force account. The purpose of this pay item is to establish a percentage that will be multiplied against the cost of force account to calculate the amount due the contractor for overhead and profit. The response time to start work will be two working days from written notification by the County. NYSDOT Standard Specifications Sections 109-05B and 109-05C will be used as guidance for record keeping. Please refer to Item 13 in the "Notice to Bidders Specifications and Proposal Form" at the beginning of this document.

2.0 MATERIALS

The materials and methods used for the repair shall meet the requirements of the Standard Specifications as amended.

3.0 CONSTRUCTION DETAILS

Construction detail requirements shall be determined at the time the "scope of work" is defined by the Engineer.

4.0 METHOD OF MEASUREMENT

Under this item the contractor is to enter as the bid, a percentage for overhead and profit which will be multiplied against the actual cost of force account to determine the amount due the contractor for a 2 day response.

5.0 BASIS OF PAYMENT

The actual overhead and profit payment will be determined by multiplying the contractor's bid percentage against the cost of force account. NYSDOT Force Account Forms will be used to report the value of this work.

The maximum bid for this item is limited to 20%.

An additional amount of overhead and profit on subcontractor's work services and fees will be 5%. This item does not require that the subcontractor accept the prime contractor overhead and profit rate, but does limit them to a maximum of 20% markup.

Percentage Bid _____**Percent**

ITEM E636.0102 - EMERGENCY BRIDGE REPAIR OVERHEAD AND PROFIT – PERCENT (MAXIMUM BID 20%)

1.0 DESCRIPTION

Under this pay item the contractor will be compensated for overhead and profit in the cost of the work performed under a force account. The purpose of this pay item is to establish a percentage that will be multiplied against the cost of force account to calculate the amount due the contractor for overhead and profit. The response time to start work will be two working days from written notification by the County. NYSDOT Standard Specifications Sections 109-05B and 109-05C will be used as guidance for record keeping. Please refer to Item 13 in the "Notice to Bidders Specifications and Proposal Form" at the beginning of this document.

2.0 MATERIALS

The materials and methods used for the repair shall meet the requirements of the Standard Specifications as amended.

Engineering Services if required under this item shall be **Qualification Based Selection (QBS)**. The Engineer will be selected jointly by the Contractor and the County.

A. The contractor will be required to submit to the Owner the name of the project Superintendent with his qualifications and bridge experience. The owner reserves the right to reject a superintendent who does not meet their needs.

3.0 CONSTRUCTION DETAILS

Construction detail requirements shall be determined at the time the "scope of work" is defined by the Erie County Department Public Works Division of Highways or Bridge Owner.

5.0 METHOD OF MEASUREMENT

Under this item the contractor is to enter as the bid, a percentage for overhead and profit which will be multiplied against the actual cost of force account to determine the amount due the contractor for a 2 day response.

5.0 BASIS OF PAYMENT

The actual overhead and profit payment will be determined by multiplying the contractor's bid percentage against the cost of force account. NYSDOT Force Account forms will be used to report the value of this work.

The maximum bid for this item is limited to 20%.

An additional amount of overhead and profit on subcontractor's work services and fees will be 5%. This item does not require that the subcontractor accept the prime contractor overhead and profit rate, but does limit them to a maximum of 20% markup.

Percentage Bid _____**Percent**

ITEM E636.0103 – AS DIRECTED BRIDGE MAINTENANCE WORK AND REPAIR WORK OVERHEAD AND PROFIT – PERCENT (MAXIMUM BID 20%)

This item will be used to perform maintenance work or repairs to bridges and culverts that is not of an emergency nature, but which have been flagged or had a maintenance request issued after an inspection. Examples of this work are: Bridge Joint Replacement, Structural Steel Repairs, Concrete Repairs, Bridge Railing Repairs or Replacement, This is not an all-inclusive list.

1.0 DESCRIPTION

Under this pay item the contractor will be compensated for overhead and profit in the cost of the work performed under a force account. The purpose of this pay item is to establish a percentage that will be multiplied against the cost of force account to calculate the amount due the contractor for overhead and profit. The response time to start work will be **ten (10)** working days from written notification by the County.

2.0 MATERIALS

The materials and methods used for the repair shall meet the requirements of the Standard Specifications as amended.

Engineering Services if required under this item shall be **Qualification Based Selection (QBS)**. The Engineer will be selected jointly by the Contractor and the County.

A. The contractor will be required to submit to the Owner the name of the project Superintendent with his qualifications and bridge experience. A minimum of 5 year experience in managing and completing project of this nature shall be required. This will have to be submitted to Erie County in writing prior to the County assigning work. The owner reserves the right to reject a superintendent or company who does not meet their needs.

3.0 CONSTRUCTION DETAILS

Construction detail requirements shall be determined at the time the "scope of work" is defined by the Erie County Department Public Works Division of Highways or Bridge Owner.

4.0 METHOD OF MEASUREMENT

Under this item the contractor is to enter as the bid, a percentage for overhead and profit which will be multiplied against the actual cost of force account to determine the amount due the contractor for a **ten (10)** day response.

5.0 BASIS OF PAYMENT

The actual overhead and profit payment will be determined by multiplying the contractor's bid percentage against the cost of force account. The force account billing shall follow NYSDOT forms and methods. Please refer to Item 13 in the "Notice to Bidders Specifications and Proposal Form" at the beginning of this document. The maximum bid for this item is limited to 20%.

An additional amount of overhead and profit on subcontractor's work services and fees will be 5%. This item does not require that the subcontractor accept the prime contractor overhead and profit rate, but does limit them to a maximum of 20% markup.

Percentage Bid _____**Percent**

SECTION 645 SIGNS

GALVANIZED SIGN POST - OPEN OR PERFORATED (UNISTRUT OR EQUAL)

Material to be of square stock punched or perforated four sides. Holes at 3/8" diameter at 1" on centers.12 GAGE Material fabricated to be telescopic to each other. All material to be delivered to Lancaster Sign Shop.

Item number shall be serialized as follows:
xx equals post size, and yy equals gauge, See table

Gauge	12	14
yy	01	01

xx		Item E645.01xxyy Punched Open 12 GA / 14 GA		Item E645.02xxyy Perforated 12 GA / 14 GA	
01	1 1/4" x 1 1/4" x 12'	$ _____ / _____	per EA.	$ _____ / _____	per EA.
02	1 1/2" x 1 1/2" x 12'	$ _____ / _____	per EA.	$ _____ / _____	per EA.
03	1 3/4" x 1 3/4" x 9'	$ _____ / _____	per EA.	$ _____ / _____	per EA.
04	1 3/4" x 1 3/4" x 10'	$ _____ / _____	per EA.	$ _____ / _____	per EA.
05	1 3/4" x 1 3/4" x 11'	$ _____ / _____	per EA.	$ _____ / _____	per EA.
06	1 3/4" x 1 3/4" x 12'	$ _____ / _____	per EA.	$ _____ / _____	per EA.
07	2" x 2" x 12'	$ _____ / _____	per EA.	$ _____ / _____	per EA.
08	2 1/4" x 2 1/4" x 12'	$ _____ / _____	per EA.	$ _____ / _____	per EA.
09	28" Braces			$ _____	per EA.
10	32" Braces			$ _____	per EA.

ITEM E645.3xxx - GALVANIZED SIGN POST (Non-Perforated) (Unistrut or Equal)

xxx			
001	1" x 1" x 12' - Non Perforated Posts	$ _____	per Lin. Ft.
002	1 1/4" x 1 1/4" x 12' - Non Perforated Posts	$ _____	per Lin. Ft.

SECTION 645

REFLECTIVE SHEETING FOR SIGNS
CONTRACT REQUIREMENTS AND PROVISIONS

1.0 GENERAL PROVISIONS

1.1 Contract Period. Contract period shall be for one year. However, with agreement by the Contractor and the ordering Erie County Department of Public Works, the contract may be extended for one year.

1.2 Quantities. Quantities listed are estimated only. However, the contract is for quantities actually ordered during the contract period.

1.3 Extension of Prices. Political subdivisions and others authorized by law including certain non-profit educational institutions may participate in this contract. Upon request, these agencies must furnish contractors with the proper tax exemption certificate.

1.4 Delivery.

1.4.1 Delivery shall be 30-45 days after receipt of order.

1.4.2 Contract price shall be F.0.B. purchase order designated destination, tailgate delivery, including technical advise/service and materials certification.

1.5 Sample. The bidder shall submit, if requested by the ordering Erie County Department of Public Works, a representative sample designated by the ordering Erie County Department of Public Works. The sample shall become the property and paid for by the ordering Erie County Department of Public Works if the bidder becomes the contractor.

1.6 Specifications. Any deviation from specifications listed herein must be clearly pointed out; otherwise, it will be considered ordered in strict compliance with these specifications, and successful bidder will be held responsible therefore. deviations must be explained in detail.

1.7 Bidders shall be full line suppliers. Products bid shall be compatible with this Erie County Department of Public Works's sign shop handling, application and screening procedures. Incomplete bid(s) documents and/or incompatible products shall not be considered for award.

1.8 Information and descriptive literature. Bidders are to furnish all information when requested. Further, as may be specified elsewhere, each bidder must submit with his proposal cuts, sketches, descriptive literature and/or complete specifications covering the products offered. Reference to previous literature submitted with a previous bid will not satisfy this provision.

1.9 Bidding Agency Rights. The bidding Erie County Department of Public Works reserves the right to waive any informalities and to reject any or all bids or to accept a bid that this Erie County Department of Public Works judges to be in its best interest.

SECTION 645

ASTM SHEETING FOR PERMANENT SIGNING
Type (EG) Type IX (VIP)

NOTICE:

This specification contains a sheeting manufacturer's field performance obligation paragraph 7.2 which shall apply only when included and made part of a bid request, proposal, and/or purchase agreement of Erie County Department of Public Works.

1.0 SCOPE

This specification covers flexible white or colored, wide angle retroflective sheeting, (hereinafter called sheeting), tape and related processing materials designed to enhance nightime visibility of traffic control signs and objects. The sheeting shall consist of enclosed glass bead lens (**Type I**) encapsulated glass bead elements adhered to a synthetic resin and encapsulated by a flexible transparent plastic that has a smooth outer surface. (**Type III**) and a prismatic lens elements with a distinctive interlocking diamond seal pattern and datum orientation marks visible from the face of a smooth surface (**Type IX**). The sheeting shall have a precoated adhesive protected by an easily removable liner.

The sheeting shall be part of a family of matched component products required for the manufacture and imaging of permanent traffic control signs as described in section 4. Only section 2.0, section 6.2.4, section 6.5 and section 7.2.1 cover printed colored areas of signs.

2.0 PREQUALIFICATION AND PERFORMANCE HISTORY

Materials (sheeting, process colors, overlay films) shall be considered for use only when, in the opinion of Erie County Department of Public Works, sufficient evidence exists to ensure that the materials and services offered can reliably conform to this specification. The sheeting manufacturer shall provide evidence of performance and suitability for use in accordance with Erie County Department of Public Works Qualified Products Procedures.

2.1 Prequalification

All prospective bidders are hereby notified that the material (sheeting, process colors, overlay films) proposed for submission or for use in production of finished traffic control devices shall be a material of manufacture and product code or designation shown on the list of approved manufacturers of materials covered by this specification maintained by Erie County Department of Public Works.

Prospective bidders or suppliers who wish to establish a performance history and prequalification for materials (sheeting, process colors, overlay films) governed by this specification should contact Erie County Department of Public Works for instructions on samples and information required for testing.

2.2 Performance History

The sheeting manufacturer shall provide test data showing that representative combined production material (sheeting, process inks, overlay films) of the type to be supplied has met the reuirements for 36 months, Type III (HI) and Type IX (VIP) and 24 months Type I (EG) of accelerated outdoor weathering described in section 6.10

This data shall be gathered by the contracting agency's own testing facility in accordance with ASTM D 4956 or an independent Erie County Department of Public Works, such as AASHTO's National Transportation Product Evaluation Program (NTPEP).

The data submitted shall cover both the retroreflective sheeting and process colors and/or overlay films manufactured by the sheeting manufacturer in standard traffic colors. The process colors and overlay films shall be tested with the sheeting to which they are intended to be applied. The data collection shall have been completed no more than 5 years prior to the offer.

The materials may also be considered for qualification if, in the opinion of the Engineer, sheeting materials of the type to be supplied has been used successfully in 5 other signing programs of similar type and size that are in similar climatic conditions for at least 5 years.

To be considered an equal alternate to an existing, qualified product, a candidate product must be used and weathered along-side the control or benchmark material to eliminate any bias in the exposure procedures.

3.0 CLASSIFICATION AND CONFORMANCE

The sheeting shall conform to FP-96, AASHTO M 268 and ASTM D4956 adhesive class 1 and 2 for **Type I** and **Type III** only and shall further be required by the plans or in the invitation to bid to conform to one of the following types. The sheeting is intended for shop production of new stationary traffic control signs or objects, exclusive of those used for construction and maintenance work zones.

3.1 The sheeting shall have either a precoated pressure sensitive adhesive (Class 1) or a tack-free adhesive (Class 2) activated by heat (**Type I** and **III** only) applied in a heat vacuum applicator in a manner recommended by the sheeting manufacturer. Both adhesive classes shall be protected by an easily removable liner.

3.2 Prepunched sheeting (**Type I** and **III** only)
Prepunched sheeting is intended for use on stationary traffic control signs and objects; it is Class 1 sheeting, prepunched for use in electronic cutting devices.

3.2.1 The sheeting shall have a precoated pressure sensitive adhesive (Class 1).

4.0 ITEMS TO BE INCLUDED IN BIDS

4.1 Process Colors

4.1.1 The manufacturer of the sheeting shall manufacture and offer process colors in standard traffic colors, clears and thinners recommended for the sheeting to meet the performance requirements of this specification. The sheeting manufacturer shall further be responsible for technical assistance in the use of these colors in accordance with Section 8, below.

4.1.2 The process colors shall be a single line of traffic colors which: may be applied before and after sheeting is applied to a substrate; require no component premixing; and will air dry for packing in 3 hours or less and requires no clear coating.

4.1.3 The sheeting manufacturer shall, upon request, provide custom color match formulas from the color series within 7 days at no charge to Erie County Department of Public Works.

4.2 Slip Sheet. Slip sheet paper recommended by the sheeting manufacturer for surface protection during heat vacuum application or for use in packaging, storing or shipping shall be furnished at no additional charge. Slip sheet paper shall be supplied in rolls by

the manufacturer, in at least equal square footage and in the same widths as the sheeting supplied.

4.3 Temperature Indicators: The manufacturer at no additional charge shall furnish expendable temperature indicators recommended by the sheeting manufacturer for control and calibration of proper application temperature.

4.4 Washers: Washers recommended by the sheeting manufacturer to protect the sign surface from damage by bolts or other fasteners shall be furnished by the manufacturer at no additional charge.

4.5 Overlay Films. The sheeting manufacturer shall also manufacturer colored acrylic imaging films and clear protective overlays, which are compatible with the sheetings, and when used in accordance with the sheeting manufacturer's instructions, shall not lessen the warranty term as described in section 7.2

5.0 TEST PANELS AND TEST CONDITIONS

Unless otherwise specified herein, sheeting shall be supplied to test panels in accordance with ASTM D 4956 section 8.2 and test conditions shall conform to ASTM D 4956 section 8.1

6.0 REQUIREMENTS

6.1 Color Requirements. Color shall be as specified and shall conform to the requirements of Table I. Conformance to color requirements shall be determined spectrophotometrically in accordance with ASTM E 1164 for retroreflective materials. CIE Tristimulus values for the 2° observer and illuminant D65 shall be calculated in accordance with the ASTM E 308.

Table I Type I
Color Specification Limits* and Reference Standards

									Daytime Luminance Factor (Y_T%) Limit (y)	
Color	X	V	X	V	X	V	X	V	Min.	Max.
White	.303	.300	.368	.366	.340	.393	.274	.329	27.0	
Yellow	.498	.412	.557	.442	.479	.520	.438	.472	15.0	40.0
Red	.613	.297	.708	.292	.636	.364	.558	.352	2.5	11.0
Blue	.066	.216	.190	.255	.244	.210	. 144	.038	1.0	10.0
Brown	.445	.353	.604	.396	.556	.443	.445	.386	3.0	9.0
Green	.030	.398	.166	.364	.286	.446	.201	.794	3.0	8.0

Table I Type III
Color Specification Limits*and Reference Standards

									Daytime Luminance Factor (Y_T %)	
Color	X	V	X	V	X	V	X	V	Min.	Max.
White	.303	.300	.368	.366	.340	.393	.274	.329	27.0	
Yellow	.498	.412	.557	.442	.479	.520	.438	.472	15.0	40.0
Red	.613	.297	.708	.292	.636	.364	.558	.352	2.5	11.0
Blue	.066	.216	.190	.255	.244	.210	. 144	.038	1.0	10.0
Brown	.445	.353	.604	.396	.556	.443	.445	.386	3.0	9.0
Green	.030	.398	.166	.364	.286	.446	.201	.794	3.0	8.0

Table I Type IX
Color Specification Limits and Reference Standards

Color	X	V	X	V	X	V	X	V	Daytime Luminance Limit (Y_T %) Min.	Max.
White	.305	.305	355	355	.335	.375	.285	.325	40.0	
Yellow	.487	.423	.545	.454	.465	.534	.427	.483	24.0	45.0
Red	.690	.310	.595	.315	.569	.341	.655	.345	3	15
Blue	.078	.171	.150	.220	.210	.160	.137	.038	1.0	10.0
Green	.030	.398	.166	.364	.286	.446	.201	.794	3.0	9.0
*Fluorescent Yellow/Green	.039	.610	.460	.540	.421	.486	.368	539	60.0	---
*Fluorescent Yellow	.521	.424	.557	.442	.479	.520	.454	.491	40.0	---

*The four pairs of chromaticity coordinates determine the acceptable color in terms of the CIE 1931 standard colorimetric system measured with standard illumination Source D65.

6.1.1 Fluorescence Requirements

6.1.2 Fluorescence Test. Conformance to fluorescence luminance factor requirements in Tables II and IV, shall be determined instrumentally on sheeting applied to aluminum test panels, using a 2-monochromator spectrophotometer employing annular 45/0 (or equivalent 0/45) illuminating and viewing geometry [1] [2] The fluorescence luminance factor shall be calculated from the fluorescence spectral radiance factors computed for illuminant D65 in accordance with ASTM E-308 "Practice for Computing the Colors of Objects by Using the CIE System" for the CIE 1931 (2^0) standard colorimetric observer. The measurements shall be made on a Labsphere BFC-450 Bispectral Fluorescence Colorescence Colorimeter or equivalent.

Table II
Minimum Fluorescence Luminance Factor – New Sheeting

SHEETING TYPE	Fluorescent Luminance Factor Limit, Y^F
	Min.
Fluorescent Yellow/Green	35%
Fluorescent Yellow	25%

6.2 Coefficient of Retroreflection: The coefficients of retroreflection shall be determined in accordance with ASTM E-810, for the minimum requirements of Table III. This table contains "core" values as found in ASTM D 4956, as well as supplemental values at 0.1^0 and 1.0^0 observation and 45^0 entrance to fully characterize sheeting performance throughout its expected range of use.

6.2.1 Units: Coefficient of retroreflection shall be specified in units of candelas per footcandle per square foot.

6.2.2 The observation angles shall be 0.1^0, 0.2^0, 0.5^0 and 1.0^0.

6.2.3 The entrance angles shall be -4^0, 30^0 and 45^0.

6.2.4 For screen printed transparent colored areas or transparent colored overlay films on white sheeting, the coefficients of retroflection shall not be less than 70% of the values for corresponding color in Table III (Type I, III). For Type IX the ratios of the R_A for the white to the R_A for the color, when measured at 0.2^0 observation, -4^0 entrance, and 0^0 rotation, shall be 5:1 to 15:1 for the red, and not less than 5::1 for blue and green.

6.3 Specular Gloss: The retroreflective sheeting shall have an 85^0 specular gloss of not less than 40 when tested in accordance with ASTM D 523.

Table III (Type I)
Minimum Coefficient of Retroreflection
(cd/lux/m^2)

White	-40	30.0	45.0
0.1	75	35	9
0.2	70	30	8
0.5	30	15	7
1.0	12	9	4

Green	-4.0	30.0	45.0
0.1	10	5	2
0.2	9	3.5	1.5
0.5	4.5	2.2	0.5
1.0	1.8	1.6	0.4

Yellow	-4.0	30.0	45.0
0.1	53	23	5
0.2	50	22	4.5
0.5	25	13	4
1.0	8.5	5.5	2

Blue	-4.0	30.0	45.0
0.1	4.2	2	0.8
0.2	4	1.7	0.6
0.5	2	0.8	0.5
1.0	0.7	0.6	0.2

Red	-4.0	30.0	45.0
0.1	15	6.2	1
0.3	14	6	0.6
0.5	2.4	1	0.4
1.0	2.4	1	0.4

Brown	-4.0	30.0	45.0
0.1	1.1	1.1	0.5
0.2	1	0.3	0.2
0.5	0.3	0.2	0.1
1.0	0.2	0.1	0.1

Table III Type III
Minimum Coefficient Retrorefection
(cd-luxm^2)

White	4.0	30.0	45.0
0.1	300	225	100
0.2	250	175	95
0.5	95	70	55
1.0	10	9.5	9.0

Green	-4.0	30.0	45.0
0.1	5-	40	15
0.2	45	30	12
0.5	15	12	10
1.0	1.0	0.8	0.5

Yellow	4.0	30.0	45.0
0.1	200	150	60
0.2	170	135	50
0.5	62	60	40
1.0	9.0	8.5	8.0

Blue	-4.0	30.0	45.0
0.1	24	14	7.0
0.2	20	11	6.0
0.5	7.5	5.0	4.0
1.0	0.5	0.3	0.1

Red	-4.0	30.0	45.0
0.1	54	40	15
0.2	45	30	12
0.5	15	12	10
1.0	2.0	1.5	1.0

Brown	-4.0	30.0	45.0
0.4	14	10	3.0
0.2	12	8.5	2.8
0.5	5.0	3.5	2.5
1.0	0.5	0.3	0.1

Table III (Type IX)
Minimum Coefficient of Retroreflection
(cd/lux/m^2)

White	-4.0	30.0	45.0
0.1	660	430	120
0.2	380	225	90
0.5	275	135	35
1.0	80	45	10

Green	-4.0	30.0	45.0
0.1	80	45	12.5
0.2	45	28	9.8
0.5	32	16	3.5
1.0	9	6	1.6

Yellow	-4.0	30.0	45.0
0.1	565	315	90
0.2	300	180	70
0.5	220	100	27
1.0	60	35	8.8

Blue	-4.0	30.0	45.0
0.1	42	22	6
0.2	22	14	4.5
0.5	17	8	1.5
1.0	4.5	3	.8

Red	-4.0	30.0	45.0
0.1	165	110	24
0.2	98	65	26
0.5	70	32	10
1.0	20	11	3

Fluorescent Yellow Green

FYG	-4.0	30.0	45.0
0.1	540	380	95
0.2	325	200	75
0.5	235	105	23
1.0	65	35	8

Fluorescent Yellow

FY	-4.0	30.0	45.0
0.1	400	250	70
0.2	240	150	55
0.5	165	75	15
1.0	45	24	6

6.5 Color Processing: The retroreflective sheeting shall be designed to work in concert with recommended imaging systems. Color processing with compatible transparent and opaque process colors shall be possible in accordance with the sheeting manufacturer's recommendation at temperatures of 60^0 to 100^0F (16^0 to38^0C) and relative humidity of 20% to 80%. The sheeting shall be heat resistant and permit force curing without staining of applied or unapplied sheeting at temperatures recommended by the sheeting manufacturer.

6.6 Shrinkage: The retroreflective sheeting shall comply with the shrinkage requirements contained in ASTM D 4956 section 7.6

6.7 Flexibility: The reflective sheeting with the liner removed and conditioned as in 5.1 shall be sufficiently flexible to show no cracking when slowly bent, in one second's time around a 1/8 inch mandrel with adhesive contacting the mandrel. Talcum powder shall be spread on the adhesive to prevent sticking to the mandrel.

6.8 Adhesive: The retroreflective sheeting shall comply with the liner removal and adhesion to requirements contained in ASTM D 4956 sections 7.8 and 7.9

6.9 Impact Resistance: The sheeting, applied according to the manufacturer's recommendations to a cleaned, etched aluminum panel of alloy 6061-T6, 0.04" (0.10cm) by" (7.6 cm) by 5" (12.7 cm) and conditioned as in 5.1, shall show no cracking when the face of the panel is subjected to an impact of a 2 inch diameter steel ball (1.19 lbs., 0.54 kg) dropped from a height of 8.5 inches (21.6 cm) through a 2.125 inch (5.4 cm) tube.

6.10 Resistance to Accelerated Weathering: The retroreflective surface of the sheeting shall be weather resistant and show no appreciable cracking, blistering, crazing or dimensional change after three years (Type III, IX,)., two years (Type I) unprotected outdoor exposure conducted according to ASTM G7 and inclined at 45^0 from the horizontal facing the equator. After cleaning, the coefficient of retroreflection shall not be less than 80% (Type III (Type IX), 50% (Type I) of the values in Table III and the colors shall conform to paragraph 6.10, 6.11, and Table IV.

Following weathering exposure, gently wash panels using a soft cloth or sponge and clean water or a dilute solution (1% by weight in water, maximum concentration) of a mild detergent. After washing, rinse thoroughly with clean water and blot dry with a soft clean cloth. After washing and drying, condition the panels at room temperature for at least two hours prior to conducting any property measurements.

6.10.1 Shows "good" color fastness or better when tested as installed.

6.10.2 Shows no appreciable evidence of cracking, scaling, pitting, blistering, edge lifting or curling or more than 1/32 inch (0.08 cm) shrinkage or expansion.

6.10.3 Retain not less than 80^0 (Type III) (Type IX), 50% (Type I) of the coefficient of retroreflection values specified in Table III.

Retroreflective performance measurements after weather exposure shall be made at all observation and entrance angles. Sheeting shall be measured using the average values at 0^0 & 90^0 rotation (Type IX). Where more than one panel of a color is measured, the coefficient of retroreflection shall be the average of all the determinations.

6.10.4 Not to be removable from the aluminum panels without damage.

6.11 Colorfastness

One specimen, exposed and prepared as specified in 6.9 shall be wet out with a mild detergent and water solution and compared with a similarly treated unexposed specimen under natural (North sky) daylight or artificial daylight having a color temperature of 7500^0 Kelvin. The colorfastness shall be evaluated as follows:

Excellent	-no perceptible change in color
Good	-perceptible but no appreciable change in color
Fair	-appreciable change in color.

Appreciable change in color means a change that is immediately noticeable in comparing the exposed specimen with the original comparison specimen. If closer inspection or a change of angle of light is required to make apparent a slight change in color, the change is not appreciable.

TABLE IV

Minimum Fluorescence Luminance Factor (All measurements shall be made after cleaning according to manufacturer's recommendations)

Color	Warranty Period	Minimum Fluorescence Luminance Factor Y^F%	Minimum Total Luminance Factor Y%
Fluorescent Yellow Green	10 Years	20%	35%
Fluorescent Yellow	10 Years	20%	35%

6.12 Optical Stability. Three pieces of retroreflective sheeting applied to test panels and conditioned as in Section 5.1 shall each first have their photometric properties characterized by measuring the coefficients of retroreflection according to the provisions in Section 6.3 at all test geometries shown in Table III. These panels shall then be exposed in an air circulating oven at 170 $\pm$ 5^0F (770$\pm$$3^0$C) for a period of 24 hours. After exposure the panels shall be allowed to condition according to the provisions of Section 5.1 These panels will again be characterized forphotometric properties by measuring the coefficients of retroreflection according to the provisions of Section 6.3 at all test geometries measured before exposure.

The coefficients of retroreflection measured after exposure shall be between 85% and 115% of the values measured before exposure for each of the three samples.

6.13 Fungus resistance: The retroreflective sheeting shall comply with the supplementary requirements contained in section S1 of ASTM D 4956.

6.14 Resistance to Corrosion. The reflective sheeting applied to a test panel and conditioned as in 5.1 shall show no loss of adhesion, appreciable discoloration or corrosion and after cleaning shall retain a minimum of 80% of the original coefficient of retroreflection when measured at 0.2^0 observation angle, -40 entrance angle, and 0^0 rotation angles after 1000 hours to a 5% concentration salt spray at 35^0 C (95^0F) when tested in accordance with ASTM B 117.

6.15 General Characteristics and Packaging: The retroreflective sheeting as supplied shall be of good appearance, free from ragged edges, cracks and extraneous materials and shall be furnished in either rolls or sheets.

When furnished in continuous rolls, the number of splices shall not be more than two per 50 yards of material, with a maximum of three pieces in any 50-yard length. Splices shall be butted or overlapped and shall be suitable for continuous application as furnished.

The sheeting shall be packaged in accordance with commercially accepted standards. Each carton shall clearly stipulate the brand, quantity, size, lot or run number, color and type adhesive. Stored under normal conditions the retroreflective sheeting as furnished shall be suitable for use for a minimum period of one year.

7.0 PERFORMANCE REQUIREMENTS AND OBLIGATIONS

7.1 Certification

The sheeting manufacturer shall submit with each lot or shipment, a certification that states the material supplied will meet all the requirements listed herein.

7.2 Field Performance Requirements

7.2.1 Sheeting processed and applied to sign blank materials in accordance with sheeting manufacturer's recommendations, shall perform effectively for the number of years stated in Table III of this specification. The retroreflective sheeting will be considered unsatisfactory if it has deteriorated due to natural causes to the extent that (1) the sign is ineffective for its intended purpose when viewed from a moving vehicle under normal day and night driving conditions; or (2) the coefficient of retroreflection is less than the minimum specified for that sheeting during that period listed.

Type I: 50% of values listed in Table III Type 1 after 7 years

Type III: 85% of values listed in Table III after 7 years and
80% of values listed in Table III after 10 years.

Type IX: 80% of values listed in Table III Type IX after 7 years and
70% of values listed in Table III Type IX after 10 years.

Failure of process colors or overlay films provided and/or sold for use on recommended sheeting shall constitute a failure of entire sign and shall be replaced under manufacturer's replacement obligations (7.3).

For screen printed transparent colored areas or transparent colored overlay films on white sheeting, the coefficients of retroreflection shall not be less than 70% of the values for the corresponding color in Table III. (Type I, III). For Type IX, the ratios of the R_A for the white to the R_A for the color, when measured at 0.2^0 observation, -4^0 entrance, and 0^0 rotation, shall be 5:1 to 15:1 for the red, and not less than 5:1 for blue and green.

All measurements shall be made after sign cleaning according to sheeting manufacturer's recommendations.

7.3 Sheeting Manufacturer's Replacement Obligation

Where it can be shown that retroreflective signs, supplied and used according to the sheeting manufacturer's recommendations, have not met the performance requirements of Section 7.2, the sheeting manufacturer shall cover restoration costs as follows for sheetings shown to be unsatisfactory during:

7.3.1 The entire 10 years (Type III, IX), 7 years (Type I): the sheeting manufacturer will replace the sheeting required to restore the sign surface to its original effectiveness.

7.3.2 In addition, during the first 7 years (Type III, IX) the sheeting manufacturer will cover the cost of restoring the sign surface to its original effectiveness at no cost to Erie County Department of Public Works for materials and labor.

7.4 Erie County Department of Public Works Obligation

Erie County Department of Public Works shall be responsible for requiring the dating of all signs at the time of application. That date constitutes the start of the field performance obligation period.

8.0 TECHNICAL ASSISTANCE REQUIREMENT

The manufacturer supplying the retroreflective sheeting requirements shall provide at no charge the services of a qualified technician for instruction and training at the primary sign manufacturing facility designated by Erie County Department of Public Works. This instruction shall be provided bi-annually and at the request of Erie County Department of Public Works. Instruction shall include but not be limited to training films, material application, equipment operation, silk screening techniques, packaging, storage, and other proven sign shop practices as they apply to the reflective sheeting supplied by the manufacturer, and to assure that the resulting signs can comply with the applicable specifications.

Additional on-site technical assistance by the manufacture supplying the retroreflective sheeting shall be provided at each of the sign shops designated in the bid invitation. This assistance shall be provided annually and at the request of Erie County Department of Public Works.

The sheeting manufacturer shall, without additional cost to Erie County Department of Public Works, provide the sign shops with competent technical service and product information, including service on screen printing problems with the inks furnished or recommended by the manufacturer for their sheeting. The manufacturer supplying the retroreflective sheeting shall provide technical assistance for their recommended sheeting application equipment. The manufacturer shall certify that trained personnel will be available on 72 hours notice to render such service to facilitate the manufacturer of finished signs. "Service" is understood to mean the capability of calibration and troubleshooting, as well as the training and retraining of personnel as required. In addition, a manufacturer's representative shall be available on site within 24-hoour notice to assess and advise on any manufacturing difficulty that arises.

9.0 APPLICABLE DOCUMENTS

The following documents, of the issues in effect on the date of invitation for bids or request for proposal form a part of this specification to the extent specified herein.

9.1 ASTM Standards

9.1.1 B 209 Specification for Aluminum and Aluminum Alloy Sheet and Plate.
9.1.2 D 523 Standard Method for Test for Specular Gloss.
9.1.3 D 4956 Standard Specification for Retroreflective Sheeting for Traffic Control.
9.1.4 E 284 Standard Definition of terms Relating to Appearance of Matrials.
9.1.5 E 308 Standard Method for computing the colors of objects by using the CIE system.
9.1.6 E 810 Standard Test Method for Coefficient of Retroreflection of Retroreflective Sheeting.
9.1.7 E 1164 Standard Practice for obtaining spectrophotometric data for object color evaluation.

9.2 Other Standards

9.2.1 AASHTO M 268 Standard Specification for Retroreflective Sheeting for Traffic Control

9.2.2 FHWA FP-96 Standard Specifications for Construction of Roads and Bridges on Federal Highway Projects.

Equipment

Equipment that is deemed necessary to properly apply sheeting materials according to the manufacturer's recommendations, and in accordance with current sign shop practices, will be supplied free of charge during the life of the contract period. A minimum of two (2) 48" HSRA with air cylinders will be required to be on site within 30 days of contract award.

ITEM E645.4nnn - SECTION I SHEETING PAY ITEMS

Will consist of roll good sheeting materials to be used in the manufacturer of standard traffic signs. All necessary items needed for the manufacturer of these signs, such as inks, and acrylic overlay films must be 3 year NTPEP tested. Pricing must be included on any equipment or parts of equipment that are listed.

1) **Type I Engineer Grade** Retro-Reflective Sheeting, Colors available are white, red, green, blue, black, brown, yellow and orange, as required by the buyer. Sizes available are ½" x 50 yds. to 48" x 100 yds. Square or rectangular sheets available at no additional charge.

Price/Sq. Ft.

Pressure-sensitive
Product Codes_____ $_____

Non-Perforated for use in electronic plotters
Product Codes_____ $_____

Perforated for use in electronic plotters
Product Codes_____ $_____

2) **Type III** High Intensity Grade Retro-Reflective Sheeting, Class 2 Pressure-Sensitive Adhesive, Non-Perforated or Perforated. Colors available are white, red, green blue brown, yellow and Orange, as required by the buyer. Sizes available are ¾" x 50 yds. to 48" x 100 yds. Square or rectangular sheets are available at no additional charge.

Price/Sq.Ft.

Type III Pressure-Sensitive Adhesive
Product Codes_____ $_____

Type III Perforated for use in
electronic plotter
Product Codes_____ $_____

$_____

3) Type III High Intensity Grade Retro-Reflective Orange/White Barricade Sheeting, Pressure-Sensitive Adhesive, Left or Right, 4" or 6" diagonal strips in width as required by the buyer, from 8" x 50yds to 48" x 100 yds.

Price/Sq.Ft.

Type III Barricade
Product Codes_____ $_____

4) Type IX Grade Retro-Reflective Sheeting, Pressure-Sensitive Adhesive, Non-Perforated. Colors available are white, red, green blue, yellow and orange, as required by the buyer. Sizes available are ¾" x 50 yds to 48" x 100 yds. Square or rectangular sheets are available at no additional charge.

Price/Sq.Ft.

Type IX Pressure-Sensitive Adhesive
Product Codes_____ $_____

(5) Type IX Grade Retro-Reflective Sheeting, Pressure-Sensitive Adhesive, Non-Perforated. Fluorescent colors available are yellow and yellow green, as required by the buyer. Sizes available are ¾" x 50 yds. To 48" x 100 yds. Square or rectangular sheets are available at no additional charge.

Price/Sq.Ft.

Type IX Pressure-Sensitive Adhesive
Product Codes_____ $_____

6) Slip Sheeting:

Slip sheet paper, as recommended by the sheeting manufacturer, for surface protection during heat vacuum application or for use in packaging, storing or shipping. Slip sheet paper shall be supplied in rolls by the manufacturer.

Price/Sq.Ft.

Slip Sheeting
Product Codes_____ $_____

7) Overlay Films:

	Price per square foot
Red	$_____
Blue	$_____
Green	$_____
Black	$_____
Brown	$_____
Thinner	$_____

8) Equipment parts:

Each bidder shall supply a price list for the following equipment parts:

(All parts for Interstate squeeze roller and 48" HSRA with air cylinders)

ITEM E645.5nnn - SECTION II SHEETING PAY ITEMS

Will consist of finished sign faces to be used in the manufacture of standard traffic signs. All materials used to manufacture faces must have three (3) years NTPEP outdoor weathering. Pricing must be included on any equipment or parts of equipment that are listed.

Type III Intensity Grade Class 1 and 2 Retro-Reflective imagined sign faces. Sizes available from 8" to 48".

	Price/Sq.Ft.
1) Type III **One** color screened faces	
0-1 Square ft.	$_____
1-4 Square ft.	$_____
4+ Square ft.	$_____

	Price/Sq.Ft.
2) Type III **Two** color screened faces.	
0-1 Square ft.	$_____
1-4 Square ft.	$_____
4+ Square ft.	$_____

	Price/Sq.Ft.
3) Type III **Three** color screened faces.	
0-1 Square ft.	$_____
1-4 Square ft.	$_____
4+ Square ft.	$_____

Type IX Grade Retro-Reflective imagined sign faces. Sizes available from 8" to 48".

	Price/Sq.Ft.
4) Type IX **One** color screened faces.	
0-1 Square ft.	$_____
1-4 Square ft.	$_____
4+ Square ft.	$_____

	Price/Sq.Ft.
5) Type IX **Two** color screened faces.	
0-1 Square ft.	$_____
1-4 Square ft.	$_____
4+ Square ft.	$_____

	Price/Sq.Ft.
6) Type IX **Three** color screened faces.	
0-1 Square ft.	$_____
1-4 Square ft.	$_____
4+ Square ft.	$_____

Type IX Grade Fluorescent Yellow, Yellow-Green and Orange Retro-Reflective imagined sign faces. Sizes available from 8" to 48".

Price/Sq.Ft.

7) Type IX **One** color screened faces.

0-1 Square ft.	$_____
1-4 Square ft.	$_____
4+ Square ft.	$_____

Price/Sq.Ft.

8) Type IX **Two** color screened faces.

0-1 Square ft.	$_____
1-4 Square ft.	$_____
4+ Square ft.	$_____

Price/Sq.Ft.

9) Type IX **Three** color screened faces.

0-1 Square ft.	$_____
1-4 Square ft.	$_____
4+ Square ft.	$_____

10) Slip Sheeting:

Slip sheet paper, as recommended by the sheeting manufacturer, for surface protection during heat vacuum application or for use in packaging, storing or shipping. Slip sheet paper shall be supplied in rolls by the manufacturer.

Price/Sq.Ft.

Slip Sheeting
Product Codes_____ $_____

11) Equipment parts:

Each bidder shall supply a price list for the following equipment parts:
(All parts for VAL-2, VAL-3, VAL-4 and 48" HSRA with air cylinders)

12) Technical Assistance Requirement:

Shall be provided as outlined in specifications.

Railroad Crossing Package

Item E645.61 Package to include two (2) "R's" 72"

And (1) 16" x 42" Material for "X"

$_____/Pkg.

Item E645.62 Contact Cement for Railroad Crossing

Package in Five Gallon Container

$_____/Ea.

SECTION 646 DELINEATORS, REFERENCE MARKERS AND SNOWPLOWING MARKERS

DELINEATOR POST

The NYSDOT Standard Specifications May 1, 2008 and all addenda shall apply except as modified herein.

Item E646.10 - Steel U channel; I lb./ft; baked enamel; length 6 ft.

$ _____ per EA.

$ _____ per Lots of 100

Item E646.20 - Steel U channel; I lbs./ft; baked enamel; length 8 ft.

$ _____ per EA.

$ _____ per Lots of 100

SECTION 652 FURNISHING AND APPLYING SALTS

FURNISHING AND APPLYING LIQUID SALTS

Section 652 of the NYSDOT standard specifications shall apply except as modified herein.

652-2 MATERIALS

1. Liquid Calcium Chloride - shall meet the requirements of 712-02 Type B

2. Natural Brine Solution - shall meet the following requirement in percentage of total solution

Sodium Chloride	10%	15%
Calcium Chloride	5%	10%
Magnesium Chloride	not more than 4%	
Potassium Chloride	not more than 2%	

Distributing equipment shall be so designed, equipped, maintained and operated so that the solution can be applied uniformly on variable widths of surfaces up to twenty (20) feet at readily determined and controlled rates per square yard. Distributor equipment shall include tachometer volume measuring device and shall be equipped with a power unit for the pump. Spray bars shall be adjustable laterally and vertically.

652-4 METHOD OF MEASUREMENT - Salt shall be measured by the number of gallons furnished and applied.

652-5 BASIS OF PAYMENT - The unit price bid per gallon shall include all labor, material and equipment necessary to apply the salt solution. Delivery to any point in Erie County will be paid separately by the mile per truck load from the supplier to the work site.

Item E652.01 Furnishing and applying liquid calcium chloride

$ _____ Per Gallon

FURNISHING ONLY $ _____ Per Gallon

Item E652.02 Furnishing and applying natural brine solution

$ _____ Per Gallon

FURNISHING ONLY $ _____ Per Gallon

Item E652.03 Delivery of liquid salt per truck:

0 to 50 miles	$ _____	Per Mile
6 to 15 miles	$ _____	Per Mile
Over 15 miles	$ _____	Per Mile

SECTION 652

SPECIFICATION FOR SALT, AGGREGATE, LIQUID BRINE OR CALCIUM CHLORIDE MIX (MODIFIED)

The bidder will supply pugmill, distributing equipment and liquid brine or liquid calcium as per specification for the brine or calcium chloride on the previous page to establish a uniform de-icing mix material as ordered by the Engineer. County will supply aggregates, granular sodium chloride or salt and necessary labor and equipment to mix material.

E652.0401	Natural Brine Solution (with pugmill)	$ _____	Per Gallon
E652.0402	Liquid Calcium Chloride (with pugmill)	$ _____	Per Gallon
E652.0403	Rental of Pugmill only	$ _____	Per Hour

SECTION 655 FRAMES, GRATES, AND COVERS

ITEM 655.0101M - CAST IRON FRAME AND GRATE: As per NYSDOT Standard Sheet M655-11R1 or the latest revision, showing standard gratings.

Weights as listed on Standard Sheets will be used in making payments for grates and frames.

Grates and/or frames : Price per lb.
F.0.B. any point in Erie County $_____

ITEM 655.0201M - RETICULINE TYPE GRATES AND FRAMES: As shown on NYSDOT Standard Sheet No. M655-10R2 or the latest revision.

Areas as listed on Standard Sheet No. M655-10R2 will be used in making payments for grates and frames.

All sizes grates and frames : Price per Sq. Ft.
F.0.B. any point in Erie County $_____

ITEM 655.0501M - PARALLEL BAR TYPE GRATES AND FRAMES: As shown on NYSDOT Standard Sheet No. M655-8R2 or the latest revision.

Weights as listed on Standard Sheet No. M655-8R2 will be used in making payment for Grates and Frames.

Price per lb.
F.0.B. any point in Erie County $_____

SECTION 655 FRAMES GRATES AND COVERS

CAST IRON GRATES FOR CORRUGATED METAL & PLASTIC PIPE

Item Number	Pipe Size	Price Each F.O.B. Erie County
E655.0106	6"	$ _____
E655.0108	8"	$ _____
E655.0110	10"	$ _____
E655.0112	12"	$ _____
E655.0115	15"	$ _____
E655.0118	18"	$ _____
E655.0124	24"	$ _____
E655.0130	30"	$ _____
E655.0136	36"	$ _____

SECTION 655

MISCELLANEOUS CASTINGS

Various standard design casting of manholes, manhole covers, curb receivers, boxes and grating.

E655.9901	Castings weighing 100 lbs. or less	Price per lb. $_____
E655.9902	Castings weighing 101 lbs. to 200 lbs.	Price per lb. $_____
E655.9903	Castings weighing over 200 lbs.	Price per lb. $_____

GRATE DATA									
Pipe Size	Overall Dia.	Grate Edge	Thickness Center	Ring Width	Bar Width	Opening Width	Leg Depth	Approx. WT.	No. of Cross
6"	7-5/8"	1/2"	5/8"	7/8"	1/2"	1/2"	1-1/8"	7 LB.	0
8"	10"	9/16"	1-1/8"	1-3/4"	5/8"	5/8"	1-1/4"	15	1
10"	12"	3/4"	1-1/4"	2"	3/4"	3/4"	1-1/4"	25	1
12"*	14-1/2"	3/4"	1-1/4"	2"	3/4"	3/4"	1-1/4"	34	1
15"**	17-1/2"	3/4"	1-1/2"	2"	3/4"	3/4"	1-1/2"	50	2
18"*	20-1/2"	3/4"	1-7/8"	2-1/2"	3/4"	3/4"	1-1/2"	75	2
24"*	26-3/8"	3/4"	2-3/4"	2-1/4"	3/4"	7/8"	1-5/8"	130	3
30"**	32-1/2"	1"	2-3/4"	2-1/2"	7/8"	1-1/4"	1-3/4"	228	4
36"**	38-1/8"	1-1/8"	3"	2-1/2"	1"	1-1/2"	1-3/4"	335	5

* One strengthening rib in center.
** Two strengthening ribs in center.

In ordering, state pipe size only.
6" thru 36" grate

Legs (No. Variable)

Opening Width

Bar Width

Ring Width

Edge Thickness

Leg Depth

Center Thickness

Erie Co. Department of Public Works
Division of Highway
CAST IRON GRATE
FOR CORRUGATED METAL PIPE

SECTION 655 FRAMES GRATES AND COVERS

MISCELLANEOUS CASTINGS

Various standard design casting of manholes, manhole covers, curb receivers, boxes and grating.

E655.9901	Castings weighing 100 lbs. or less	Price per lb. $_____
E655.9902	Castings weighing 101 lbs. to 200 lbs.	Price per lb. $_____
E655.9903	Castings weighing over 200 lbs.	Price per lb. $_____

SECTION 655 FRAMES, GRATES, AND COVERS

CAST IRON MANHOLE FRAMES AND COVERS

1. Material to be **AASHTO M105 Class 30B** or **Class 35B** cast iron
2. Unit must withstand HS-25 loading
3. Frames and covers shall have machined bearing surfaces
4. Covers shall have (4) equally spaced 3/4" vent holes
5. Covers to be lettered ECSD SANITARY (or STORM - as specified) in 2" HIGH X 1/8" deep letters
6. No commercial "Brand Name" lettering will be allowed on the exposed surface cover.
7. Dimensions and design of standard frames and covers shall be in accordance with ERIE COUNTY Department of Environment & Planning Division of Sewerage Management Standard Detail #13 on page 118.
8. Dimensions and design of WaterTight frames and covers shall be in accordance with ERIE COUNTY Department of Environment & Planning Division of Sewerage Management Standard Detail #16 on page 119.

SPECIFICATION

CAST IRON MANHOLE PAVING (ADJUSTING) RINGS

1. Material shall be **AASHTO M105 Class 30B** or **Class 35B** cast iron
2. Each ring shall incorporate three (3) set screws to secure ring to manhole frame.

STANDARD FRAME AND COVER

(PIPE SIZES 8" & UP)

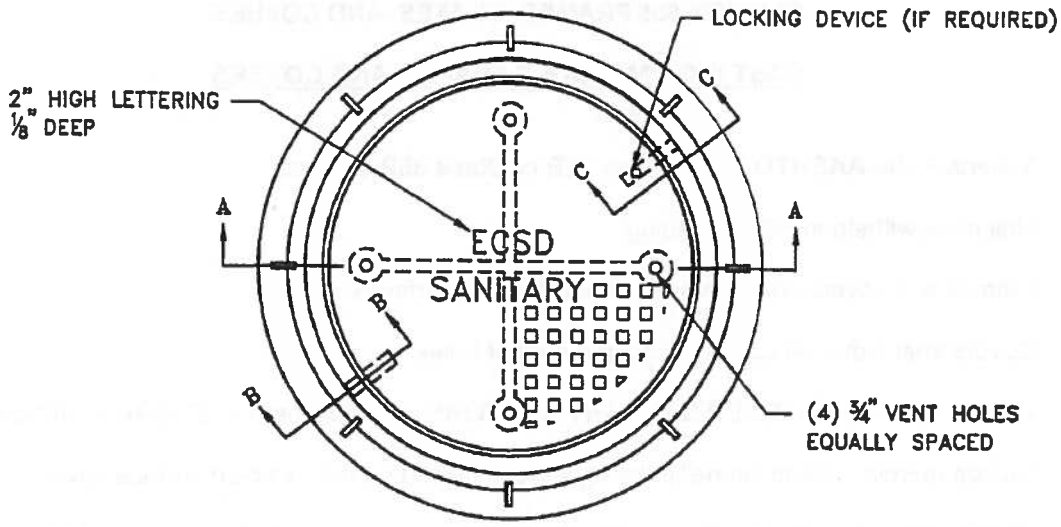

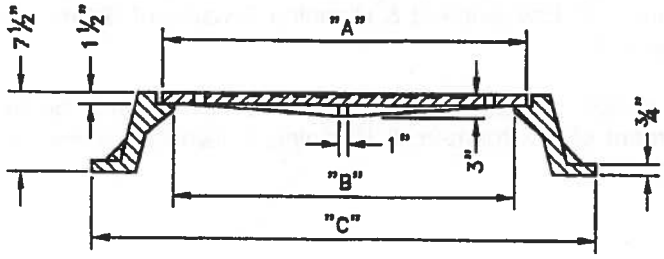

SECTION A–A

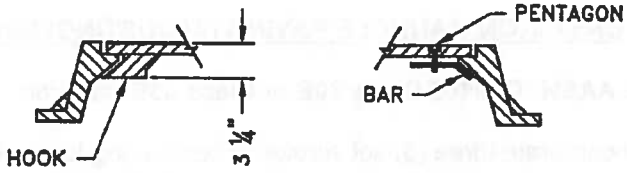

B–B C–C

LOCKING DEVICE

TABLE			
PIPE SIZE	DIMENSION "A"	DIMENSION "B"	DIMENSION "C"
8" THRU 18"	24"	22 1/4"	35"(MAX.)
OVER 18"	32"	30"	46"(MAX.)

STANDARD FRAME AND COVER NOTES

1. MATERIAL ASTM A48 CLASS 30B CAST IRON.
2. UNIT MUST WITHSTAND H-20 WHEEL LOADING.
3. ALL DIMENSIONS ARE TO BE CONSIDERED MINIMUM WITH THE EXCEPTION OF THE COVER, WHICH MUST CONFORM EXACTLY TO MAINTAIN INTERCHANGEABILITY WITHIN THE COUNTY.
4. COVER WEIGHT 210 LBS. (MAX)
5. COATING NOT REQUIRED.
6. FRAMES AND COVERS SHALL HAVE MACHINED BEARING SURFACES.
7. LOCKING DEVICE MUST BE SITUATED TO ALLOW EASY REMOVAL OF COVER.
8. NO COMMERCIAL "BRAND NAME" LETTERING WILL BE ALLOWED ON THE EXPOSED SURFACE OF THE COVER.

ERIE COUNTY
DEPT. OF ENVIRONMENT & PLANNING
DIVISION OF SEWERAGE MANAGEMENT

Rev. 1	4/24/93 ADDED NOTE NO. 8	STD.DETAIL
Rev. 2	4/9/96 REV'D PIPE SIZE TO OVER 18"	13
Rev. 3	12/9/96 REV'D <18" DIMENSIONS	
File: d-13	Date: 3/1/91	

WATER TIGHT FRAME AND COVER

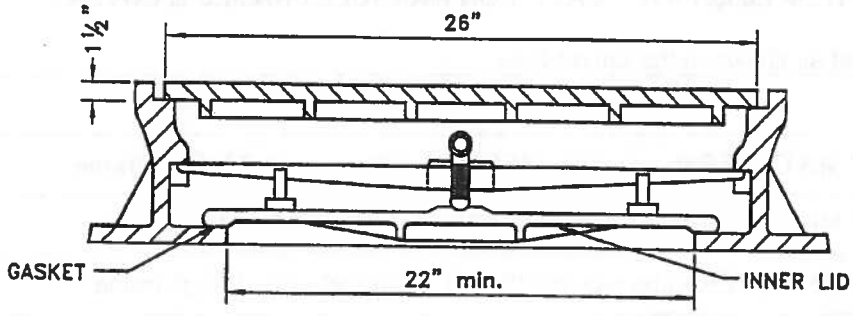

WATER TIGHT FRAME AND COVER NOTES

1. MATERIAL ASTM A48 30B CAST IRON.
2. UNIT MUST WITHSTAND H-20 WHEEL LOADING.
3. ALL DIMENSIONS ARE TO BE CONSIDERED MINIMUM WITH THE EXCEPTION OF THE COVER, WHICH MUST CONFORM EXACTLY TO MAINTAIN INTERCHANGEABILITY WITHIN THE COUNTY.
4. WATER TIGHT MANHOLE UNITS SHALL HAVE 4" STEEL VENT PIPE ASSEMBLY AS PER DETAIL.
4. FRAMES AND COVERS SHALL HAVE MECHANICAL BEARING SURFACES.
6. COVERS SHALL BE SOLID WITH NON-PENETRATING PICKHOLES.
7. NO COMMERCIAL "BRAND NAME" LETTERING WILL BE ALLOWED ON THE EXPOSED SURFACE OF THE COVER.
8. COVER TO BEAR THE INSCRIPTION "ECSD SANITARY".

ERIE COUNTY DEPT. OF ENVIRONMENT & PLANNING DIVISION OF SEWERAGE MANAGEMENT	Rev. 1 2/7/94	ADDED NOTES 7 AND 8	STD.DETAIL 16
	Rev. 2		
	File: d-16	Date: 3/1/91	

BID SHEET FOR MANHOLE CASTINGS/PAVING RINGS

ITEM E655.10nn CAST IRON MANHOLE FRAMES & COVER

nn shall be serialized as shown in the table below

nn		
01	24" x 1 ½" MH COVER to be labeled "**ECSD Sanitary**" with 7 ½"high frame	/F&C
02	24" x 1 ½" MH COVER to be labeled "**ECSD Storm**" with 7 ½" high frame	/F&C
03	24" x 1 ½" MH COVER to be labeled "**ECSD Sanitary**" with 3" high frame	/F&C
04	32" x 1 ½" MH COVER to be labeled "**ECSD Sanitary**" with 7 ½" high frame	/F&C
05	24" x 1 ½" Manhole Cover only labeled "**ECSD Sanitary**"	/Cover
06	24" 1 ½" Manhole Cover only labeled "**ECSD Storm**"	/Cover
07	24" x 1 ½" LOCKING MH COVER w/pentagon bolt labeled "**ECSD Sanitary**" with 7 ½" high frame	/F&C
08	26 x 1 ½" WATER TIGHT MH COVER w/frame labeled "**ECSD Sanitary**"	/F&C

ITEM E655.20nn CAST IRON MANHOLE PAVING RINGS

Unit bid prices shall be per each

	n equals the value at right	1	2	3	4	5	6
	Cover Diameter & Thickness/Rise	1"	1 ½"	¾"	2"	3"	4"
E655.201n	22" x ¾"						
E655.202n	22 ½" x ¾"						
E655.203n	23 x ¾"						
E655.204n	23 ½" x ¾"						
E655.205n	24" x ¾"						
E655.206n	24" x 1 ½"	----------					
E655.207n	32 x 1 ½"	----------					

SECTION 680 TRAFFIC SIGNALS

1.0 DESCRIPTION

This work shall consist of furnishing and installing new traffic signal equipment, in accordance with Section 680 of the NYS DOT Standard Specifications of May 1, 2008.

PAYMENT WILL BE MADE UNDER:

ITEM NUMBER	ITEM	PAY UNIT	
680.5001	Pole Excavation and Concrete Foundation	Cubic Yard	_____
680.5002	Concrete Base for Controller Cabinet	Each	_____
05680.5050	Remove Pole Foundation	Foot	_____
680.51XXYY	Pullbox	Each	_____
	XX= Size 01 – 15 inch 02 – 18 inch 03 – 24 inch 04 – 30 inch 05 – Rectangular 26 x 18 inch 06 – Rectangular 26 x 18 inch or 24 inch Diameter 07 – Rectangular 26 x 18 inch or 30 inch Diameter YY=Type 01 – Reinforced Concrete 02 – Optional Reinforced Concrete Bituminous Fiber		
680.5120	Cast Iron Junction Box	Each	_____
680.52XXYY	Conduit	Foot	_____
05680.5308XXYY	Conduit, Flexible, Liquid Tight, Non-metallic XX=Type YY=Diameter	Foot	_____
680.53	Conduit Jacking or Boring	Foot	_____
680.54	Inductance Loop Installation	Foot	_____
680.56	Emergency Pre-emption System	Each	_____
680.60XXYY	Traffic Signal Pole – Span Wire	Each	_____
680.61XXYY	Traffic Signal Pole – Span Wire with Lighting Arm XX=Load in kips (1,2,3,4,...) YY=Length in whole feet (*)	Each	_____
680.62XXYY	Traffic Signal Pole – Mast Arm	Each	_____
680.63XXYY	Traffic Signal Pole –Dual Mast Arm (**)	Each	_____
680.64XXYY	Traffic Signal Pole –Mast Arm with Lighting Arm	Each	_____

680.65XXYY	Traffic Signal Pole– Dual Mast Arm(**) with Lighting Arm XX=Mast arm mounting height in feet (*) YY=Mast arm length in whole feet	Each	_____
680.67XX	Traffic Signal Pole –Post Top Mount	Each	_____
680.68XX	Traffic Signal Pole –Bracket Mount	Each	_____
680.69XX	Traffic Signal Pole Bracket Mount with Lighting Arm XX=Mounting height in feet (*)	Each	_____
680.7001	Single Span Wire Assembly	Each	_____
680.7002	Dual Span Wire Assembly with Upper Tether Wire	Each	_____
680.7003	Dual Span Wire Assembly with Lower Tether Wire	Each	_____
680.7004	Messenger Assembly	Foot	_____
680.7005	Guy Assembly	Each	_____
680.700602	Riser Assembly, ½ inch Diameter	Each	_____
680.700603	Riser Assembly, 1 inch Diameter	Each	_____
680.700604	Riser Assembly, 1 ½ inch Diameter	Each	_____
680.700606	Riser Assembly, 2 inch diameter	Each	_____
680.700607	Riser Assembly, 2 ½ inch Diameter	Each	_____
680.700608	Riser Assembly, 3 inch Diameter	Each	_____
680.700609	Riser Assembly, 3 ½ inch Diameter	Each	_____
680.700610	Riser Assembly, 4 inch Diameter	Each	_____
680.700612	Riser Assembly, 5 inch Diameter	Each	_____
680.700613	Riser Assembly, 6 inch Diameter	Each	_____
680.71	Shielded Lead-in Cable	Foot	_____
680.72	Inductance Loop Wire	Foot	_____
680.73XXYY	Signal Cable	Foot	_____
680.74XXYY	Signal Cable with Integral Messenger XX=Number of Conductors YY=Wire Gauge	Foot	_____
680.75XXYY	Shielded Communication Cable	Foot	_____
680.76XXYY	Shielded Communication Cable with Integral Messenger XX=Number of Pairs	Foot	_____

	YY=Wire Gauge		
05680.79000X	Remove Traffic Signal Installation X=Location number	Lump Sum (LS)	_____
10680.8031	Furnish and Install Microcomputer and Cabinet	Each	_____
680.810101	Traffic Signal Module -12 inch, Red Ball, LED	Each	_____
680.810102	Traffic Signal Module -12 inch, Red Arrow, LED	Each	_____
680.810103	Traffic Signal Module -12 inch Yellow Ball, LED	Each	_____
680.810104	Traffic Signal Module -12 inch Yellow Arrow, LED	Each	_____
680.810105	Traffic Signal Module -12 inch, Green Ball, LED	Each	_____
680.810106	Traffic Signal Module -12 inch, Green Arrow, LED	Each	_____
680.810107	Traffic Signal Section –Type I, 12 inch	Each	_____
680.810108	Traffic signal Module -12 inch, Bi-Modal, Yellow/Green Arrows, LED	Each	_____
680.8102	Traffic Signal Section, Optically Programmed -12 inch	Each	_____
680.810301	Traffic Signal Module -8 inch, Red Ball, LED	Each	_____
680.810302	Traffic Signal Module -8 inch, Red Arrow LED	Each	_____
680.810303	Traffic Signal Module -8 inch, Yellow Ball, LED	Each	_____
680.810304	Traffic Signal Module -8 inch, Yellow Arrow LED	Each	_____
680.810305	Traffic Signal Module -8 inch, Green Ball, LED	Each	_____
680.810306	Traffic Signal Module -8 inch, Green Arrow, LED	Each	_____
680.810307	Traffic Signal Section – Type I, 8 inch	Each	_____
680.810308	Install Ball/Arrow LED Traffic Signal Module	Each	_____
680.810601	Traffic Signal Section – Polycarbonate, Type I, 12 inch	Each	_____
680.810701	Traffic Signal Section – Polycarbonate, Type I, 8 inch	Each	_____
680.8111	Traffic Signal Bracket Assembly 1 Way	Each	_____
680.8112	Traffic signal Bracket Assembly 2 Way	Each	_____
680.8113	Traffic Signal Bracket Assembly 3 Way	Each	_____
680.8114	Traffic Signal Bracket Assembly 4 Way	Each	_____
680.8115	Traffic Signal Bracket Assembly 5 Way	Each	_____

680.8120	Traffic Signal Disconnect Hanger	Each	_____
680.813101	Pedestrian Signal Module -12 inch, Hand Symbol,LED	Each	_____
680.813102	Pedestrian Signal Module -12 inch x 12 inch MAN LED	Each	_____
680.813103	Pedestrian Signal Section –Type I, 12 inch	Each	_____
680.813104	Install LED Pedestrian Signal Module	Each	_____
680.813105	Pedestrian Signal Module -12 inch, Bi-Modal, Hand/Man Symbols, LED	Each	_____
680.813106	Pedestrian Signal Section –Polycarbonate, Type I, 12 inch	Each	_____
680.813107	Pedestrian Signal Module -16 inch by 18 inch Bi-Modal HAND/MAN LED	Each	_____
680.813108	Pedestrian Signal Section, Type I –for 16 inch by 18 inch LED Module	Each	_____
680.813109	Pedestrian Signal Section –Polycarbonate, Type I For 16 inch by 18 inch LED Module	Each	_____
680.8141	Pedestrian Signal Bracket Mount Assembly	Each	_____
680.8142	Pedestrian Signal Post Top Mount Assembly	Each	_____
03680.8150	Pedestrian Count-Down Timer Module	Each	_____
680.82XX	Overhead Sign Assembly XX=type	Each	_____
680.8220	Flashing Beacon Sign Assembly	Each	_____
680.8225	Pedestrian Push Button and Sign –without Post	Each	_____
680.8226	Pedestrian Push Button and Sign –with Post	Each	_____
680.8230	Fire Pre-Emption Tell Tale Light	Each	_____
15680.94	Raintight Disconnect Box	Each	_____
08680.949970	Furn/Install electrical disconnect/generator transfer Switch	Each	_____
15680.9502XX	Service Cable 2 Conductor XX = Wire Gauge	Foot	_____
06680.9510	Furnish and Install Power Feed System	Each	_____

NOTE: SEE PAY ITEM CATALOG FOR ITEM NUMBERS CONTAINING VARIABLES

(*) Mast arm Mounting Heights, and span wire pole length and load, are as defined on the Standard Traffic Signal Poles' standard sheets and in 724-03, Traffic Signal Poles. The nominal luminaire mounting height and span shall be as indicated on the plans.

(**) The mast arm length and mounting height indicated by the item number is for only one of the mast arms. The other mast arm length and mounting height shall be as indicated on the plans.

2.0 Item 680.13– PORTABLE SOLAR POWER TRAFFIC SIGNAL (PSPTS)

The requirements of NYSDOT Approved Product List dated September 2006 for this item will be followed with the following except:

MATERIALS:

The Portable Solar Power Traffic Signals will have to be delivered to any location in Erie County as requested. Delivery may be required on the same day.

The operation of the Portable Solar Power Traffic Signals shall be explained to the Senior Highway Maintenance Engineer, or General Crew Chief or Crew Chief. This training may also include law enforcement and or other highway personnel.

METHOD OF MEASUREMENT:

Payment for this item will be made on a calendar day, week or monthly basis for each PVMS supplied.

Price per set of PSPTS **$_____ per day (24 hours)**

$_____ per week (7 days)

$_____ per month

SECTION 688 PREFORMED REFLECTORIZED PAVEMENT MARKINGS

CONTRACT REQUIREMENTS AND PROVISIONS

1.0 GENERAL PROVISIONS

1.1 Contract Period. Contract period shall be for one year. However, with agreement by the contractor and the ordering agency, the Contract may be extended for one year.

1.2 Quantities. Quantities listed are estimated only. However, the contract is for quantities actually ordered during the contract period.

1.3 Extension of Prices. Political subdivisions and others authorized by law including certain non-profit educational institutions may participate in this contract. Upon request, these agencies must furnish contractors with the proper tax exemption certificate.

1.4 Delivery.

1.4.1 Delivery shall be 30-45 days after receipt of order.
1.4.2 Contract price shall be F.O.B. purchase order designated destination, tailgate delivery, including technical advise/service and materials certification.

1.5 Sample. The bidder shall submit, if requested by the ordering agency, a representative sample designated by the ordering agency. The sample shall become the property and paid for by the ordering agency if the bidder becomes the contractor.

1.6 Specifications. Any deviation from specifications listed herein must be clearly pointed out; otherwise, it will be considered ordered in strict compliance with these specifications, and successful bidder will be held responsible therefore. Deviations must be explained in detail.

1.7 Bidders shall be full line suppliers. All products bid shall be compatible with this agency's pavement marking operation. Incomplete bid(s) documents and/or incompatible products shall not be considered for award.

1.8 Information and descriptive literature. Bidders are to furnish all information when requested. Further, as may be specified elsewhere, each bidder must submit with his proposal cuts, sketches, descriptive literature and/or complete specifications covering the products offered. Reference to previous literature submitted with a previous bid will not satisfy this provision.

1.9 Bidding Agency Rights. The bidding agency reserves the right to waive any informalities and to reject any or all bids or to accept a bid that this agency judges to be in its best interest.

SECTION 688 PREFORMED REFLECTORIZED PAVEMENT MARKINGS

1.0 MATERIALS - GENERAL

The pre-formed markings shall consist of white or yellow film with pigments selected and blended to conform to standard highway colors through the expected life of the film.

The film shall have reflective glass sphere(s) distributed through out the base film and bonded to the top surface. The size, quality and refractive index of the glass beads shall be such that the performance requirements for the markings shall be met. The bead adhesion shall be such that beads are not easily removed when the material surface is scratched with a thumbnail.

The film shall have glass bead retention qualities such that when a 2" x 6" sample is bent over a 1/2" diameter mandrel, with the 2" dimension perpendicular to the mandrel axis, microscopic examination of the area on the madrel shall show no more than 10% of the beads with entrapment by the binder of less than 40%.

The markings shall be provided in specified widths and shapes. Pre-formed words and symbols shall conform to the applicable shapes and sizes as outlined in the *NYSDOT "Manual on Uniform Traffic Control Devices for Streets and Highways,"* dated 2001 or as modified.

The preformed markings shall be capable of being adhered to asphalt concrete or portland cement concrete by a pressure sensitive precoated adhesive. The preformed marking film shall mold itself to pavement contours by action of traffic at normal pavement temperatures. After application the markings shall be immediately ready for traffic. The manufacturer, when bidding, shall identify proper solvents and/or adhesives to be applied at the time of application, all equipment necessary for proper application, and recommendations for application that will assure an effective performance life.

The material shall be packaged in accordance with accepted commercial standards, and when stored in a cool, dry area indoors shall be suitable for use for one year after date of purchase.

2.0 CLASSIFICATION

General purpose retro-reflective preformed pavement marking material for preformed longitudinal, transverse and word/symbol markings subjected to high traffic volume and severe wear conditions such as repeated shear action from crossover, encroachment on edge and channelization lines, and stop, start, or turn movements.

3.0 REQUIREMENTS

The marking film shall be pliant polymer, retro-reflective film with pre-coated pressure sensitive adhesive.

Composition: The retro-reflective pliant polymer pavement marking film shall consist of a mixture of high quality polymeric materials, pigments, and glass beads distributed throughout its base cross-sectional area, with a reflective layer of beads bonded to the top surface. The film shall be composed of the following materials:

Material	Minimum Percent by Weight
Resins & Plasticizers	20
Pigments and Extenders	30
Graded Glass Beads	18

The remaining percentage shall be comprised of the above materials in various proportions.

This film shall be capable of being fabricated into pavement markings of specified dimensions and of being adhered to asphalt or portland cement concrete by means of a pressure sensitive precoated adhesive.

Applicability to Pavement Surfaces: The pavement marking film shall be capable of application to new, dense and open graded asphalt concrete wearing courses during the paving operation in accordance with the manufacturer's instructions. When applied to stable existing asphalt or portland cement concrete pavements in accordance with manufacturer's instructions, the pavement marking film shall be capable of conforming to pavement contours through the action of traffic at normal pavement temperatures.

Patchability: The pavement marking film shall be capable of use for patching worn areas of the same type film.

Tensile Strength: The film shall have a minimum tensile strength of 40 pounds per square inch of cross-section when tested according to ASTM D638-76. A sample 6" x 1" x 0.06" shall be tested at a temperature between 70°F and 80°F using a jaw speed of 0.25 inches per minute.

Elongation: A sample 6" x 1" x 0.06" shall have a minimum elongation of 15% at break when tested according to ASTM D638-76 using a jaw speed of 0.25 inches per minute

Skid Resistance: The surface of the retro-reflective pliant polymer film shall provide as initial minimum skid resistance value of 35 BPN when tested according to ASTM E303-74.

Reflectance: The white and yellow films shall have the following initial minimum reflectance values at 0.2° and 0.5° observation angles and 86.0° entrance angle as measured in accordance with the testing procedures of Federal Test Meth Standard 370. The photometric quantity to be measured shall be specific luminance (SL)*, and shall be expressed as millicandelas per square foot per footcandle (mcd.ft^{-2}fc^{-1}). The metric equivalent shall be expressed as millicandelas per square meter per lux. The test distance shall be 50 ft. (15 m) and the sample size shall be a 2.0 x 2.5 ft. rectangle (0.61 x 0.76 m).

The angular aperture of both the photoreceptor and light projector shall be 6 minutes of arc. The reference center shall be the geometric center of the sample, and the reference axis shall be taken perpendicular to the test sample.

	White		Yellow	
Observation Angle	0.2°	0.5°	0.2°	0.5°
SL (mcd ft^{-2}) fc^{1-})	550	380	410	250

*"The quantity SL treats the retro-reflector as a surface source (rather than a point source) whose projected area is visible as an area the observation position. The quantity SL relates to the way the effective retro-reflective surface is focused on the retina of the human eye and to the visual effect thereby produced. It is recommended for describing to the visual effect thereby produced. It is recommended for describing the performance of highway signs and striping, or large vehicular markings which are commonly viewed as discernable surface areas." Federal Test Method Standard 370, 3.1.2, Note 6. March 1, 1977.

Reflectivity Retention: To have a good, effective performance life the glass beads must be strongly bonded and not be easily removed by traffic wear.

The following test shall be employed to measure reflectivity retention.

TABER ABRASER SIMULATION TEST

Using a Taber abraser with an H-18 wheel and a 125 gram load, the sample shall be inspected at 200 cycles, under a microscope, to observe the extent and type of bead failure.

No more than 15% of the beads shall be lost due to popout and the predominate mode of failure shall be "wear down" of the beads.

Thickness: The retro-reflective plant polymer film, without adhesive, shall be supplied in a standard thickness of 0.06", unless otherwise specified.

Effective Performance Life: The film, when applied according to the recommendation of the manufacturer, shall provide a neat, durable marking that will not flow or distort due to temperature if the pavement surface remains stable. Although reflectivity is reduced by wear, the pliant polymer shall provide a cushioned, resilient substrate that reduces bead crushing and loss. The film shall be weather resistant and, through normal traffic wear, shall show no appreciable fading, lifting or shrinkage throughout the useful life of the marking, and shall show no significant tearing, roll back, or other signs of poor adhesion.

5.0 APPLICATION TO PAVEMENT SURFACES

It is intended that application of plastic materials be made on clean, dry pavement surfaces, free of dirt and foreign matter, simply by positioning the plastic on the surface and setting in place with a weighted roller, then permitting traffic to pass over it. The pavement temperature should be 60 degrees F or over. Special instructions shall be supplied for application at temperatures below 60 degrees F.

Should plastic require activators for the adhesive or various special coatings for different pavement surfaces, the bidder must quote the cost of the activator, or special coatings, in the price per sq. ft. of plastic bid upon. Detailed information must be supplied with the bid indicating special application procedures.

6.0 APPLICATION INLAY FOR NEW ASPHALTIC SURFACES

The plastic shall be capable of being applied to new asphaltic pavement immediately prior to the final rolling of the new surfaces, and of being rolled into place with conventional pavement and highway steel rollers. The pavement temperature shall be at least 120° F.

The plastic and adhesive shall be of the type that water used on the road roller to prevent asphalt pick-up, shall not be harmful to the successful application of the plastic.

7.0 PACKAGING

The plastic will be furnished in stated widths and in rolls of 45 minimum lengths, packaged in center mandrel cartons.

8.0 WARRANTY

The supplier shall replace all material found to be defective within 12 months of shelf life. This shall not include defects caused by poor installation.

9.0 APPLICATION 0F 4" MATERIAL

All 4" material will be installed with a mechanical applicator of two types. The first type is towed behind a motorized vehicle with a primary function of overlaying preformed material on existing pavement. A second type of applicator is manually operated for overlaying material on existing pavement or inlaying material on new hot pavement.

10. LINERED AND UNLINERED MATERIAL

All 4" material shall be supplied without a liner. All other sizes shall be supplied linered or unlinered as designated on the purchase orders.

11. PAYMENT ITEMS

Payment will be made under:

E688.01	White Preformed Reflectorized Pavement Stripes
E688.02	Yellow Preformed Reflectorized Pavement Stripes
E688.10	Primer

UNIT PRICE LIST
PREFORMED PAVEMENT MARKINGS

Roll Size	E688.01 Price per Lineal Foot	E688.02 Price per Lineal Foot
4"	$	$
6"	$	$
8"	$	$
10"	$	$
12"	$	$
14"	$	$
16"	$	$
24"	$	$
48"	$	$

E688.10	Price Per Gallon
Primer	$

NOTE: Prices are F.0.B. Destination. Incomplete bids are not acceptable. Colors are white or yellow.

NOTE: BIDDER WILL PLEASE FURNISH QUANTITY DISCOUNTS

SECTION 701 HYDRAULIC CEMENTS

CEMENTITOUS MATERIALS PER NEW YORK STATE STANDARD SPECIFICATIONS

ITEM E701.01 - PORTLAND CEMENT TYPE 1 OR 2

As required in section 701-01, Portland Cement of New York State Standard Specifications dated May 1, 2008 and all addenda.

Price Per Bag $_____**F.O.B. Trucks**

Weight Per Bag _____**94 lbs.**

ITEM E701.02 - MASONRY CEMENT

As required in Section 701-02, Masonry cement, of New York State Standard Specifications dated May 1, 2008 and all addenda

Price Per Bag Type M $_____**F.O.B. Trucks**

Weight Per Bag _____**75 lbs.**

Price Per Bag Type S $_____**F.O.B. Trucks**

Weight Per Bag _____**75 lbs.**

ITEM E701.04 – CONCRETE REPAIR MATERIAL

QUICK CRETE CRACK RESISTANT OR EQUIVALENT

As required in Section 701-04, Concrete Repair Material of New York State Standard Specifications dated May 1, 2008 and all addenda

Price Per Bag $_____**F.O.B. Trucks**

Weight Per Bag $_____ **80 lbs.**

ITEM E705.21 - PRE PACKED MORTAR

As required in Section 705-21, Masonry Mortar, of New York State Standard Specifications dated May 1, 2008. and all addenda.

Price Per Bag $_____**F.O.B. Trucks**

Weight Per Bag _____**60 lbs.**

Price Per Bag $_____**F.O.B. Trucks**

Weight Per Bag _____**80 lbs.**

SECTION 703

CONTRACT REQUIREMENTS - AGGREGATES

All aggregates shall meet the requirements of the New York State Department of Transportation Materials Bureau. A NYSDEC Mine and Land reclamation permit number and a NYSDOT Source Number must be submitted with this bid.

Section 703	Screened Gravel, Crushed Gravel, Crushed Stone, Crushed Slag per New York State Department of Transportation Standard Specifications May 1, 2008 shall apply.
Mortar Sand	Section 703-03 New York State Department of Transportation Standard Specifications - material requirements shall apply.
Concrete Sand	Section 703-07 New York State Department of Transportation Standard Specifications - material requirements shall apply.
Section 605-2.02	Under drain Filter -The material shall be as required for Type I Section 605 New York State Department of Transportation Standard Specifications.

703-02 Aggregates for Cold Mix Bituminous Pavements (Open Graded)

The material shall be as required by Section 405 New York State Department of Transportation Standard Specification dated May 1, 2008.

Section 304 - Subbase Course-Granular Material (Gravel, Crushed Stone or Slag)

The general specification of material as required for Section 304 shall apply.

Surface Treatment Aggregates - Crushed Gravel, Crushed Stone and Crushed Slag (Size Designation #1A, #1ST, and #1).

Coarse aggregates for use in the construction of bituminous surface treatments and sealcoats shall conform to specifications as identified in Section 703 , Paragraph 703-02, *NYSDOT STANDARD SPECIFICATIONS CONSTRUCTION AND MATERIALS*, May 1, 2008 (and the physical requirements, gradation and primary size shall apply as in Tables 703-2, 703-3, 703-4, and 703-6.)

NYSDEC MLR No. _____

NYSDOT Source No._____

If vendor does not have a source number, so state; and bid will be subject to approval/acceptance by purchaser with sampling and testing documentation/verification that material meets or exceeds NYSDOT specifications.

SECTION 703

3/8 SURFACE TREATMENT AGGREGATES
CRUSHED GRAVEL, CRUSHED STONE AND CRUSHED SLAG

Proportionate Amounts - Square Mesh Sieves

All Aggregates

Aggregate Passing	Percent
3/8"	100%
1/8"	0-15%
#200	1.0% Max

NOTE: The #200 Limit is determined by NYSDOT Method 201 or ASTM-117-69.

Section 620 - The standard specification in section 620 shall apply.

SECTION 703

AGGREGATES – CRUSHED STONE

Price Per Ton

Item	**F.O.B. Trucks**
Screenings	$
Type 1 Stone (NYSDOT Table 405-1)	$
Type 2 Stone (NYSDOT Table 405-1)	$
Type 3 Stone (NYSDOT Table 405-1)	$
#1 - Stone (NYSDOT Table 703-4)	$
#1A - Stone (NYSDOT Table 703-4)	$
#1ST Stone (NYSDOT Table 703-4)	$
#2 Stone (NYSDOT Table 703-4)	$
#1 & 2 Stone Mixed (NYSDOT Table 703-4)	$
#3 or 4A Stone Mixed (NYSDOT Table 703-4)	$
#4 or 3 & 4 Stone Mixed (NYSDOT Table 703-4)	$
Oiling Stone 3/8"	$
1" Crusher Run (NYSDOT Table 703-4)	$
2" Crusher Run (*Subbase Type 2*) (NYSDOT Table 703-4)	$
3" Crusher Run (*Subbase Type 1*) (NYSDOT Table 703-4)	$
4" Crusher Run (*Subbase Type 3*) (NYSDOT Table 703-4)	$
620-2.02 Stone Fill - Fine (Table 620-1)	$
620-2.02 Stone Fill - Medium (Table 620-1)	$
620-2.03 Stone Fill – Light (Table 620-1)	$
620-2.02 Stone Fill - Heavy (Table 620-1)	$
620-2.03 Dry Rip Rap	$

Plant/Pit Location _____

SECTION 700

AGGREGATES – GRAVEL

Price per ton, F.O.B. Trucks

Item	Crushed Gravel 703-0202	Screened Gravel 703-0203
Type I Gravel (NYSDOT Table 405-1)	$ _____	$ _____
Type 2 Gravel (NYSDOT Table 405-1)	$ _____	$ _____
Type 3 Gravel (NYSDOT Table 405-1)	$ _____	$ _____
#1 Gravel (screened & washed) (NYSDOT Table 703-4)	$ _____	$ _____
#1A Gravel (NYSDOT Table 703-4)	$ _____	$ _____
#1ST Gravel (NYSDOT Table 703-4	$ _____	$ _____
#2 Gravel (NYSDOT Table 703-4) (Screened and Washed)	$ _____	$ _____
#1 & 2 Mixed Gravel	$ _____	$ _____
Bank Run	$ _____	$ _____
1" Crusher Run, or screened	$ _____	$ _____
*2" Crusher Run, or screened (Sub base Type 4)	$ _____	$ _____
*3" Crushed Run, or screened (Sub base Type 1)	$ _____	$ _____

Plant / Pit Location _____

*shall conform to the requirements of NYSDOT Specifications 703.02 (Tables 703-02 and 703-3)

AGGREGATES – CRUSHED SLAG

Item	Price Per Ton F.O.B. Trucks
Screenings	$
Type 1 Slag (NYSDOT Table 405-1)	$
Type 2 Slag (NYSDOT Table 405-1)	$
Type 3 Slag (NYSDOT Table 405-1)	$
#1 Slag (NYSDOT Table 703-4)	$
#1A Slag (NYSDOT Table 703-4)	$
#1ST Slag (NYSDOT Table 703-4)	$
#2 Slag (NYSDOT Table 703-4)	$
#3A Slag (NYSDOT Table 703-4)	$
#3, #4 and Oversized (NYSDOT Table 703-4)	$
#1 and #2 Mixed	$
1" Crusher Run, Slag	$
2" Crusher Run, Slag (Subbase Type 2)	$
3" Crusher Run Slag (Subbase Type 1)	$

Plant/Pit Location _____

SECTION 703

AGGREGATES - MISCELLANEOUS MATERIALS

The NYSDOT Standard Specifications dated May 1, 2008 and all addenda shall apply:

Item	Price Per Ton F.O.B. Trucks
703-03 Mortar Sand	$ _____
703-07 Concrete Sand	$ _____
Crushed Concrete Recycled, 1 inch	$ _____
Crushed Concrete Recycled, 2 inch	$ _____
Sidewalk Blend (A 60-40 blend of No. 1 and Concrete Sand)	$ _____
Milled Asphalt Pavement Material Meeting the Graduation Requirements of NYSDOT SPEC. 304-2.02	$ _____

MATERIAL TESTING

Soil Borings with 2" split spoon samples @ 5 ft. intervals	$ _____	/LF
Soil Borings with 2" split spoon with continuous sampling	$ _____	/LF
Rock Cores: NX Shale	$ _____	/LF
NX Limestone	$ _____	/LF

ITEM E704.03 - CONCRETE BLOCK (DRAINAGE STRUCTURES)

1.0 SCOPE

This specification covers the material and quality requirements for solid concrete manhole blocks for use in the construction of drainage structures. All concrete block and brick shall meet the requirements of Section 704-03 and 704-02 of the New York State Specification dated May 1, 2008, including all addenda except as modified herein.

2.0 MATERIAL REQUIREMENTS

The subsections entitled "*General*" and "*Material Requirements*" of 706-02 Reinforced Concrete Pipe shall apply except that all references to approved working drawings and reinforcements shall not apply.

The block shall be of such dimensions as to construct the drainage structure to the nominal dimensions shown on the plans within a tolerance of minus 1/2 inch from those nominal dimensions. The block shall be of such length that only full length or half-length units are required to place any one course. The block may be rectangular or radial in shape.

If radial, they must be made in true segments of a circle with the inside and outside surfaces curved to the desired radius. The units used in the cone section of the manhole shall be drawn in (reduced) 6 inches for every 8 inches in height. The unit shall be so designed and laid that the interior surfaces of manholes are cylindrical for the straight sides and conical for at least the top four courses with no offsets.

Corner units for square or rectangular basins or inlets must be "L" shaped with an inside return side not less than one quarter nor more than one half the length of the normal unit.

Units for both manholes and basins shall be so designed that only full length units are required to lay any one course. Inside and outside joints shall not exceed one-half inch.

Concrete mix proportions shall be such that the minimum compressive strength as determined on the units themselves shall be as stated in this specification.

The transportation and placement of concrete shall be done by methods that will prevent segregation of the concrete materials.

The use of high early strength cement, calcium chloride, or any other concrete additive not expressly approved is prohibited.

Blocks shall be sound and free from cracks or other defects that would interfere with the proper placing of the block.

All blocks shall be subjected to curing by any one of the methods described in the subsection entitled "Curing" 706-02, Reinforced Concrete Pipe. Curing shall be accomplished to the satisfaction of the County. Units shall be protected from freezing from the time the concrete is placed and until curing is completed.

3.0 TEST

The minimum average compressive strength of concrete block samples representing any lot, as determined upon the units themselves, shall be 2500 pounds per square inch of cross sectional area of the unit as laid in the structure.

The compressive strength of any individual unit shall not be less than 2000 pounds per square inch.

The maximum average absorption of concrete block samples representing any lot shall not exceed eight percent (8%) by weight. The absorption of any individual unit-shall not exceed ten percent (10%) by weight.

All test procedures shall be conducted in accordance with ASTM C140.

4.0 BASIS OF ACCEPTANCE

The material will be considered for acceptance in accordance with procedural directives of the County for either stock lot quantities at the manufacturing location, or on the basis of job sampling in the event samples are not taken at the plant.

Solid Concrete Block		Hollow Concrete Block		Standard Concrete Brick
8"x8"x16" Price/Ea.	4"x8"x16" Price/Ea.	8"x8"x16" Price/Ea.	4"x8"x16" Price/Ea.	Price/Ea.
$	$	$	$	$

Delivered To District In Truck Load Delivery to District Plant and Minimum Pallet Load 75 Blocks

Lots of	1 Pallet	2-4 Pallet	5-7 Pallet	8 or More No additional Charge
1 Clarence	$	$	$	$ 0
1 Lancaster	$	$	$	$ 0
2 Harlem	$	$	$	$ 0
3 Hamburg	$	$	$	$ 0
3 Angola	$	$	$	$ 0
4 East Aurora	$	$	$	$ 0
4 Protection	$	$	$	$ 0
5 East Concord	$	$	$	$ 0
3 Collins	$	$	$	$ 0

SECTION 799

MATERIALS – DELIVERY

DELIVERY ON ALL BITUMINOUS MIXES
DELIVERY ON ALL STONE, GRAVEL, OR SLAG ITEMS

The mileage to be allowed from plant to destination is the actual minimum mileage between the two points over properly conditioned roads, as determined by the County.

Mileage delivery cost per ton in County trucks from plant to destination will be figured on the following basis:

.30 each mile for the first five (5) miles
plus (+)
.25 each additional mile six to fifteen (6 – 15) miles
plus (+)
.20 each additional mile over fifteen to fifty (15 – 50) miles

This cost shall be added to bid price for material to determine bid award.

For estimating purposes only, trucks rented by the County for hauling materials under this contract shall be considered as County-owned trucks.

It will be assumed that bidder's transportation rates indicated in the Invitation for Bids are to be calculated in the same manner unless different method of calculation is explained.

Hauling From Plant Gate or Pit to Job Site

	0-5 Miles Fixed Charge Price Per Ton	6-15 Miles Price Per Ton Per Mile	Price Per Ton Per Mile for Over 15 Miles
All Bituminous Mixes or Aggregate Delivered to a Paver or Widener	$ _____	$ _____	$ _____
All Asphalt, Stone, Gravel or Slag Delivered to Stockpile or Plant	$ _____	$ _____	$ _____

SECTION 900

RENTAL EQUIPMENT

Description:

Provide the equipment enumerated on an as needed basis. Equipment to be a recent model in good repair and operating condition and shall be fully insured. The price bid shall include delivery to and from any single jobsite in Erie County. A day is eight (8) hours, a week is forty (40) hours and a month is one hundred seventy six (176) hours. Overtime for operators (employees) shall be computed at time and one half over 8 hours. Overtime for machine shall be computed as straight time (one eighth of the daily rate, one fortieth of the weekly rate, etc.) for each hour over 8 hours.

Road Widener:

The widener shall be of a Blaw Knox Model #195 or equal.

Price with Operator $_____**Per hour**

$_____**Per day**

$_____**Per week**

$_____**Per month**

Bituminous Asphalt Paver:

The paver shall be a minimum of 19 feet paving width (Barber Green 240 or Cat AP1000 or equal) equipped with automatic transverse slope and longitudinal grade screed controls.

Price with Operator $_____**Per hour**

$_____**Per day**

$_____**Per week**

$_____**Per month**

Price with Operator and Screed Man $_____**Per hour**

$_____**Per day**

$_____**Per week**

$_____**Per month**

Self-Propelled 4 Speed Loader:

The loader shall be a minimum twenty-five (25') foot conveyor model 7-11 Vathey type loader or equal.

Price with Operator $_____**Per hour**

$_____**Per day**

$_____**Per week**

$_____**Per month**

Portable Screening Plant:

Portable Screening Plant to be Finlay 312 or equal with portable fifty (50') foot Stacking Conveyor to be Finlay 524 or equal. Unit to be sized to screen RAP at approximately 1-1/2", at approximately 80 T.P.H.

Price without Operator $_____**Per hour**

$_____**Per day**

$_____**Per week**

$_____**Per month**

Price with Operator $_____**Per hour**

$_____**Per day**

$_____**Per week**

$_____**Per month**

Roller:

The roller shall be a minimum sixty (60") inch dual drum articulated vibratory asphalt compactor.

2-Ton:

Price without Operator $_____**Per hour**

$_____**Per day**

$_____**Per week**

$_____**Per month**

Price with Operator $_____**Per hour**

$_____**Per day**

$_____**Per week**

$_____**Per month**

3-5 Ton:

Price without Operator $_____**Per hour**

$_____**Per day**

$_____**Per week**

$_____**Per month**

Price with Operator $_____**Per hour**

$_____**Per day**

$_____**Per week**

$_____**Per month**

10 Ton with minimum 72" Drum:

Price without Operator $_____**Per hour**

$_____**Per day**

$_____**Per week**

$_____**Per month**

Price with Operator $_____**Per hour**

$_____**Per day**

$_____**Per week**

$_____**Per month**

Pneumatic Tired Roller:

The pneumatic tired roller shall have a maximum wheel load of five thousand six hundred (5,600 lbs) pounds, tire compression on pavement of 80 ± 5 P.S.I. and a maximum axle load of twenty-two thousand four hundred (22,400 lbs.) pounds.

Price without Operator $_____**Per hour**

$_____**Per day**

$_____**Per week**

$_____**Per month**

Price with Operator $_____**Per hour**

$_____**Per day**

$_____**Per week**

$_____**Per month**

Excavator Crawler:

Six (6) Ton:

Price without Operator $_____**Per hour**

$_____**Per day**

$_____**Per week**

$_____**Per month**

Price with Operator $_____**Per hour**

$_____**Per day**

$_____**Per week**

$_____**Per month**

Twelve (12) Ton:

Price without Operator $_____**Per hour**

$_____**Per day**

$_____**Per week**

$_____**Per month**

Price with Operator $_____**Per hour**

$_____**Per day**

$_____**Per week**

$_____**Per month**

Fifteen (15) Ton:

Price without Operator $_____**Per hour**

$_____**Per day**

$_____**Per week**

$_____**Per month**

Price with Operator $_____**Per hour**

$_____**Per day**

$_____Per week

$_____Per month

Twenty-Two (22) Ton:

Price without Operator $_____Per hour

$_____Per day

$_____Per week

$_____Per month

Price with Operator $_____Per hour

$_____Per day

$_____Per week

$_____Per month

Excavator Rubber Tire with Telescope Boom:

Fifteen (15) Ton Unit:

Price without Operator $_____Per hour

$_____Per day

$_____Per week

$_____Per month

Price with Operator $_____Per hour

$_____Per day

$_____Per week

$_____Per month

Eighteen (18) Ton Unit:

Price without Operator $_____Per hour

$_____Per day

$_____Per week

$_____Per month

Price with Operator $_____Per hour

$_____Per day

$_____Per week

$_____Per month

Twenty-One (21) Ton Unit:

Price without Operator $_____Per hour

$_____Per day

$_____Per week

$_____Per month

Price with Operator $_____Per hour

$_____Per day

$_____Per week

$_____Per month

Wheel Loader Rubber Tire:

Two (2) Yard Unit:

Price without Operator $_____Per hour

$_____Per day

$_____Per week

$_____Per month

Price with Operator $_____Per hour

$_____Per day

$_____Per week

$_____Per month

Two and a Half (2-1/2) Yard Unit:

Price without Operator $_____Per hour

$_____Per day

$_____Per week

$_____Per month

Price with Operator $_____Per hour

$_____Per day

	$_____	**Per week**
	$_____	**Per month**

Three (3) Yard Unit:

Price without Operator	$_____	**Per hour**
	$_____	**Per day**
	$_____	**Per week**
	$_____	**Per month**
Price with Operator	$_____	**Per hour**
	$_____	**Per day**
	$_____	**Per week**
	$_____	**Per month**

Backhoe Rubber Tire, Eighteen (18ft) foot Digging Capacity, Extend-A-Hoe Case 580K, or equal:

Price without Operator $_____**Per hour**

$_____**Per day**

$_____**Per week**

$_____**Per month**

Price with Operator $_____**Per hour**

$_____**Per day**

$_____**Per week**

$_____**Per month**

Bulldozer:

D-6 or equal:

Price without Operator $_____**Per hour**

$_____**Per day**

$_____**Per week**

$_____**Per month**

Price with Operator $_____**Per hour**

$_____**Per day**

$_____**Per week**

$_____**Per month**

D-7 or equal:

Price without Operator $_____**Per hour**

$_____**Per day**

$_____**Per week**

$_____**Per month**

Price with Operator $_____**Per hour**

$_____**Per day**

$_____**Per week**

$_____**Per month**

Bucket Truck:

The bucket truck shall be a Baker Versalift VO-50 or equal. The truck shall have an articulate, telescopic boom with a minimum of a forty (40ft) foot reach.

Price without Operator $_____**Per day**

$_____**Per week**

$_____**Per month**

Truck:

Single axle or ten (10) wheel tandem axle dump trucks equipped with tarps as required. Trucks must be fully licensed and insured. The vehicle and its driver must be in compliance with current **NYSDMV and Federal** regulations. Bid price shall include fuel, maintenance, and repair of vehicles.

S/A Dump Truck:

Price with Operator $_____**Per hour**

$_____**Per day**

$_____**Per week**

$_____**Per month**

T/A Dump Truck:

Price with Operator $_____**Per hour**

$_____**Per day**

$_____**Per week**

$_____**Per month**

Tri Axle Dump:

Price with Operator $_____**Per hour**

$_____**Per day**

$_____**Per week**

$_____**Per month**

Low-Boy Tractor Truck and Trailer Twenty (20) ton capacity:

Price with Operator $_____**Per hour**

$_____**Per day**

$_____**Per week**

$_____**Per month**

Rotary Broom Sweeper:

Self-propelled heavy-duty rotary broom sweeper Lay Mor 8-B or equal.

Price without Operator $_____**Per hour**

$_____**Per day**

$_____**Per week**

$_____**Per month**

Price with Operator $_____**Per hour**

$_____**Per day**

$_____**Per week**

$_____**Per month**

Mower:

Heavy duty four (4) wheel tractor with side and rear mounted flail mowers.

Price without Operator $_____**Per hour**

$_____**Per day**

$_____**Per week**

$_____**Per month**

Mower:

Heavy duty four (4) wheel tractor with brush hog.

Price without Operator $_____**Per hour**

$_____**Per day**

$_____**Per week**

$_____**Per month**

Compressor 185 CFM:

Price without Operator $_____**Per hour**

$_____**Per day**

$_____**Per week**

$_____**Per month**

Street Sweeper:

Broom type front loader Elgin, Pelican, or equal.

Price without Operator $_____**Per hour**

$_____**Per day**

$_____**Per week**

$_____**Per month**

Price with Operator $_____**Per hour**

$_____**Per day**

$_____**Per week**

$_____**Per month**

Brush Chipper:

The brush chipper shall be a Vermeer BC1800A or equal equipped with automatic feed.

Price without Operator $_____**Per hour**

$_____**Per day**

$_____**Per week**

$_____**Per month**

Skid Steer Loader:

To be a Bobcat 863F series or equal, with a 73HP engine minimum and High-flow Hydraulics 27 GPM minimum.

Price without Operator $_____**Per hour**

$_____**Per day**

$_____**Per week**

$_____**Per month**

Skid Steer Loader Attachments:

Attachments for Skid Steer Loader to be bid price per hour added to the hourly rate bid for the basic machine.

Auger $_____**Per hour**

Breakers $_____**Per hour**

Planer $_____**Per hour**

Wheel Saw $_____**Per hour**

Combination Bucket $_____**Per hour**

Sweeper $_____**Per hour**

Trenchers $_____**Per hour**

Spray Patcher:

Spray patcher to be chassis mounted Rosco RA-300 or equal.

Price without Operator $_____**Per hour**

$_____**Per day**

$_____**Per week**

$_____**Per month**

Price with Operator $_____**Per hour**

$_____**Per day**

$_____**Per week**

$_____**Per month**

Spray Patcher to be a trailer mounted Rosco RA-2000 or equal.

Price without Operator $_____**Per hour**

$_____**Per day**

$_____**Per week**

$_____**Per month**

Price with Operator $_____**Per hour**

$_____**Per day**

$_____**Per week**

$_____**Per month**

Flusher/Vacuum:

Combination sewer flusher and vacuum unit, vactor 2100 Series, or equal.

Price without Operator $_____**Per hour**

$_____**Per day**

$_____**Per week**

$_____**Per month**

Price with Operator $_____**Per hour**

$_____**Per day**

$_____**Per week**

$_____**Per month**

Shoring Equipment:

Trench boxes,

Price without Operator $_____**Per hour**

$_____**Per day**

$_____**Per week**

$_____**Per month**

Shoring Equipment (Continued)

Price with Operator $_____**Per hour**

$_____**Per day**

$_____**Per week**

$_____**Per month**

Pipe lasers:

Price without Operator $_____**Per hour**

$_____**Per day**

$_____**Per week**

$_____**Per month**

Price with Operator $_____**Per hour**

$_____**Per day**

$_____**Per week**

$_____**Per month**

Hydraulic Shoring:

Price without Operator $_____**Per hour**

$_____**Per day**

$_____**Per week**

$_____**Per month**

Price with Operator $_____**Per hour**

$_____**Per day**

$_____**Per week**

$_____**Per month**

Slide rail Systems:

Price without Operator $_____**Per hour**

$_____**Per day**

$_____**Per week**

$_____**Per month**

Price with Operator $_____**Per hour**

$_____**Per day**

$_____**Per week**

$_____**Per month**

Wood Grinder:

Large tub or horizontal wood grinder Mobark 133, Mobark 5600 or equivalent, capable of grinding large trees and stumps.

Price without Operator $_____**Per hour**

$_____**Per day**

$_____**Per week**

$_____**Per month**

Price with Operator $_____**Per hour**

$_____**Per day**

$_____**Per week**

$_____**Per month**

Topsoil Shredder:

Large with ¾ inch sieve.

Price without Operator $_____**Per hour**

$_____**Per day**

$_____**Per week**

$_____**Per month**

Topsoil Shredder (Continued)

Price with Operator **$_____Per hour**

$_____Per day

$_____Per week

$_____Per month

Mat Smoothness Machine/Material Transfer Device:

Price without Operator **$_____Per hour**

$_____Per day

$_____Per week

$_____Per month

Price with Operator **$_____Per hour**

$_____Per day

$_____Per week

$_____Per month

Movement of Equipment:

After initial move of equipment (rental) to a single jobsite, any move to additional jobsite will be paid per move on per hour basis between jobsites.

Price **$_____Per hour/move**

Note: On all equipment rental charges, portal to portal costs will not be paid for on an hourly rate, vendor to include these charges in hourly rate bid.

RENTAL OF EQUIPMENT FOR SNOW AND ICE REMOVAL

Description:

Rental of dump trucks with plow and salter for snow and ice removal to include machine, operator, fuel, oil, grease, repairs, parts, maintenance, overhead and profit. There will be No Additional Payment for overtime.

Single Axle Dump Truck Price	**$_____**	**Per hour**
Tandem Axle Dump Truck Price	**$_____**	**Per hour**
Tri Axle Dump Truck Price	**$_____**	**Per hour**

GENERAL MUNICIPAL LAW
SECTION 103-A, 103-B – WAIVER OF IMMUNITY

The vendor hereby agrees to provisions of section **103-A** and **103-B** being part of **Chapter 605** of the laws of 1959 of the **General Municipal Law**, which requires that upon refusal of a person, when called before a Grand Jury to testify concerning a transaction or contract had with the State, any political subdivision thereof, a public authority or with any public department, agency or official of the State or of any political sub-division thereof or of a public authority, to sign a waiver of immunity against subsequent criminal prosecution or to answer any relevant question concerning such transaction or contract.

A) Such person, any firm, partnership or corporation of which he is a member, partner, director or officer, shall be disqualified from thereafter selling to or submitting bids to or receiving awards from or entering into any contracts with any municipal corporation or any public department, agency, or official thereof, for goods, work or services, for a period of five (5) years after such refusal and

B) Any and all contracts made with any municipal corporation or any public department, agency or official thereof, since the effective date of this law, by such person, and by any firm, partnership, or corporation of which he is a member, partner, director or officer may be cancelled or terminated by the municipal corporation without incurring any penalty or damages on account of such cancellation or termination, but any monies owing by the municipal corporation for goods delivered or work done prior to the cancellation or termination shall be paid.

GENERAL MUNICIPAL LAW
SECTION 109 – ASSIGNMENT OF PUBLIC CONTRACTS

1) A clause shall be inserted in all specifications of contracts hereafter made or awarded by an officer, board or agency of a political subdivision, or of any district therein, prohibiting any contractor, to whom any contract shall be let, granted or awarded as required by law, from assigning, transferring, conveying, subletting or otherwise disposing of the same, or of his right, title or interest therein, or his power to execute such contract, to any other person or corporation without the previous consent in writing of the **Officer, Board or Agency awarding the contract.**

2) If any contractor, to whom any contract is let, granted, or awarded as required by law, by any office, board or agency of a political subdivision, or of any district therein, without the previous written consent specified in subdivision one of this section assign, transfer, convey, sublet or otherwise dispose of such contract, or his right, title or interest therein, or his power to execute such contract, to any other person or corporation, the officer, board or agency which let, made, granted or awarded such contract shall revoke and annual such contract, and the political subdivision or district therein, as the case may be, and such officer, board or agency shall be relieved and discharged from and all liability and obligations growing out of such contract or such contractor, and to the person or corporation to which such contract shall have been assigned, transferred, conveyed, sublet or otherwise disposed of, and such contractor, and his assignees, transferees or sub lessees shall forfeit and lose all monies, theretofore earned under such contract, except so much as may be required to pay his employees. The provisions of this section shall not hinder, prevent or affect any assignment by any such contractor for the benefit of his creditors made pursuant to the laws of this State.

LABOR LAW SECTION 220 AND 220-B

1) All contractors shall be governed by all of the laws of the State of New York and of the County of Erie now in force, or which hereafter may be adopted, which are applicable to this work, including Article 8 of the New York State Labor Law.

2) The contractor agrees that no laborer, workmen or mechanic in the employ of the contractor, a subcontractor, or other person doing or contracting to do the whole or a part of the work contemplated by this contract, shall be permitted or required to work more than eight (8) hours in any one calendar day, or more than five (5) days in any one week, excepting in case of extraordinary emergency caused by fire, flood, or danger to life or property, workmen, or mechanic employed by said party of the first part, subcontractor, or other person, on about, or upon the work to be performed under this contract, the wages required to be paid pursuant to the provisions of Section 220 of the Labor Law of the State of New York.

3) In the hiring of employees for the performance of work under this contract, or any subcontract hereunder, the contract agrees that he or any person acting on his behalf, shall not by reason of race, color, creed, or national origin, discriminate against any citizen of the State of New York who is qualified and available to perform the work to which the employment relates; the contractor further agrees that he as a subcontractor, nor any person on his behalf, shall not in any manner discriminate against or intimidate any employee hired for the performance of work under this contract, on account of race, creed, color or national origin; and it is further agreed by the parties hereto that there may be deducted from the amount payable to the contractor by the party of the second part under this contract, a penalty of Five Dollars ($5.00) for each person for each calendar day during which such person was discriminated against or intimidated in violation of the provision of the contract, and it is further agreed by the parties hereto that this contract may be canceled or terminated by the County of Erie and all monies due or to become due or to become due hereunder may be forfeited, for a second or any subsequent violation of the terms or conditions of this section of the contract.

NON-COLLUSIVE BIDDING CERTIFICATION

By submission of this bid or proposal, the bidder certifies that:

A) This bid or proposal has been independently arrived at without collusion with any other bidder or with any competitor or potential competitor;

B) This bid or proposal has not been knowingly disclosed and will not be knowingly disclosed prior to the opening of bids or proposals for this project, to any other bidder, competitor or potential competitor;

C) No attempt has been or will be made to induce any other person, partnership or corporation to submit or not to submit a bid or proposal;

D) The person signing this bid or proposal certifies that he has fully informed himself regarding the accuracy of the statements contained in this certification and under the penalties of perjury, affirms the truth thereof, such penalties being applicable to the bidder as well as to the person signing in its behalf;

E) Attached hereto (if a corporate bidder) is a certified copy of resolution authorizing the execution of this certificate by the signatory of this bid or proposal in behalf of the corporate bidder?

Resolved that_____be
(Name of the Person)

Authorized to sign and submit the bid or proposal of this corporation for the furnishing of maintenance and construction materials, labor and equipment as required in the 2013 specifications of the Erie County Department of Public Works, Division of Highways and to include in such bid or proposal the certificate as to non-collusion required by section one hundred three-d (103-d) of the General Municipal Law as the act and deed of such corporation, and for any inaccuracies or misstatements in such certificate this corporate bidder shall be liable under the penalties of perjury.

The foregoing is a true and correct copy of the resolution adopted by _____Corporation at a meeting of its board of directors held on the_____day of,_____ 20_____.

(Seal of the Corporation)

County of Erie
Division of Purchase and Central Services
Edward A. Rath County Office Building
95 Franklin, Buffalo, New York 14202

The undersigned proposes to furnish to the Erie County Department of Public Works, Division of Highways, Construction and maintenance Materials Until **March 31, 2014** at the price shown, in quantities desired and in accordance with the specifications now on file in the

Respectfully submitted this_____day of_____20____

Sign Here_____
Legal Name Firm

By_____

By_____